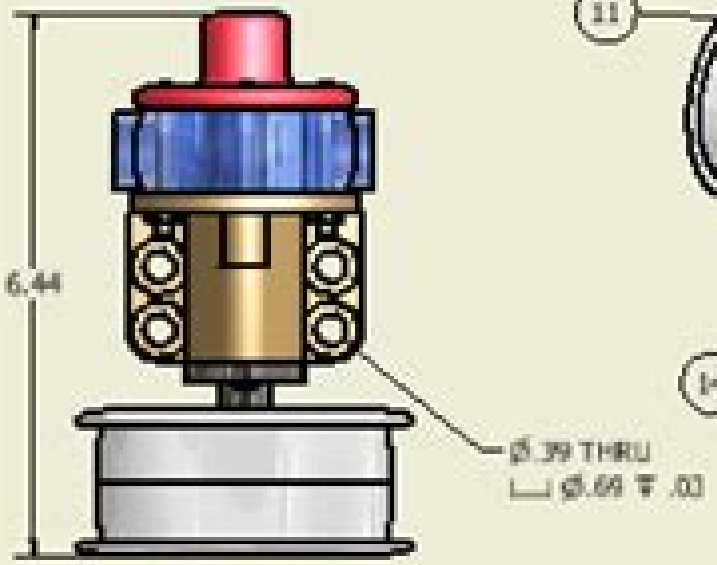

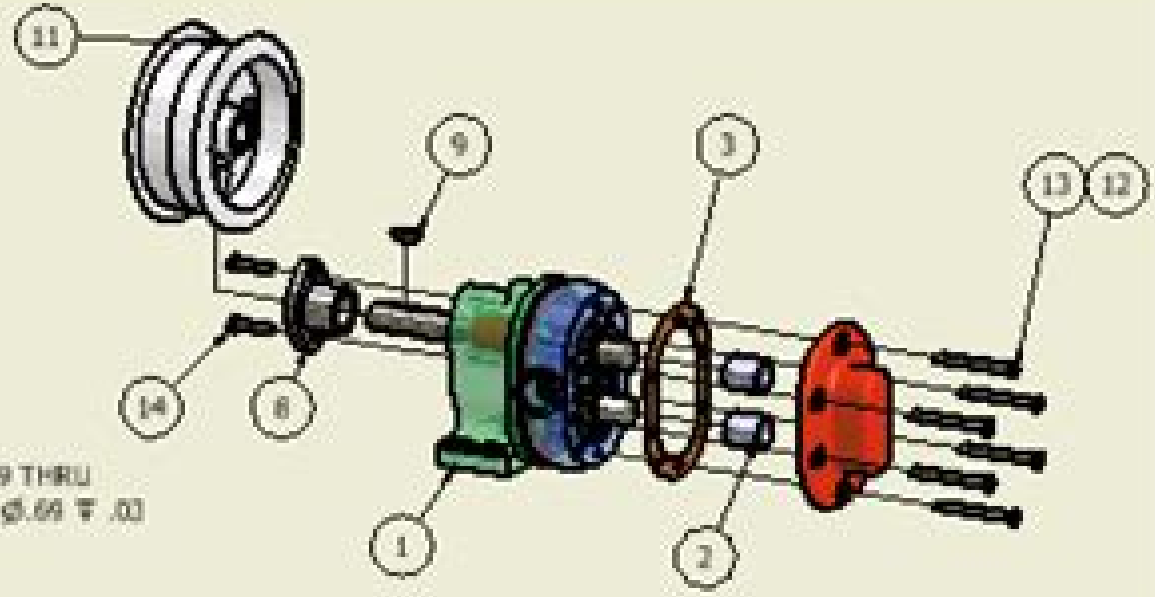

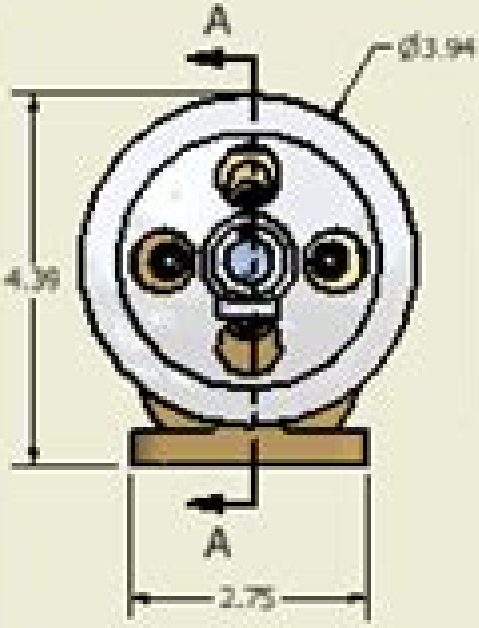

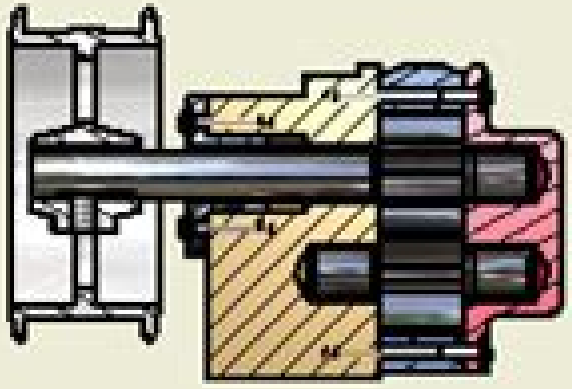

SECTION A-A
SCALE 1 / 2

PARTS LIST		
ITEM	QTY	PART NUMBER
1	1	Pump Base
2	4	Gear Bushing
3	2	Gasket
4	1	Ppump Body
5	1	Driven Gear
6	1	Drive Gear
7	1	Gland Bushing
8	1	Gland
9	1	Woodruff Key
10	1	Pump Cover
11	1	Pulley
12	4	10-32 Nut
13	6	10 - 32 - 1 3/4
14	2	10 - 32 - 7/8

Autodesk Inventor File Types

R Barnett

Autodesk Inventor File Types:

Embark on a breathtaking journey through nature and adventure with Crafted by is mesmerizing ebook, Natureis Adventure: **Autodesk Inventor File Types** . This immersive experience, available for download in a PDF format (Download in PDF: *), transports you to the heart of natural marvels and thrilling escapades. Download now and let the adventure begin!

https://droplet2026.furrfu.com/public/book-search/HomePages/Center_Hill_Lake_Tennessee_Fishing_Guide.pdf

Table of Contents Autodesk Inventor File Types

1. Understanding the eBook Autodesk Inventor File Types
    - The Rise of Digital Reading Autodesk Inventor File Types
    - Advantages of eBooks Over Traditional Books
2. Identifying Autodesk Inventor File Types
    - Exploring Different Genres
    - Considering Fiction vs. Non-Fiction
    - Determining Your Reading Goals
3. Choosing the Right eBook Platform
    - Popular eBook Platforms
    - Features to Look for in an Autodesk Inventor File Types
    - User-Friendly Interface
4. Exploring eBook Recommendations from Autodesk Inventor File Types
    - Personalized Recommendations
    - Autodesk Inventor File Types User Reviews and Ratings
    - Autodesk Inventor File Types and Bestseller Lists
5. Accessing Autodesk Inventor File Types Free and Paid eBooks
    - Autodesk Inventor File Types Public Domain eBooks
    - Autodesk Inventor File Types eBook Subscription Services
    - Autodesk Inventor File Types Budget-Friendly Options
6. Navigating Autodesk Inventor File Types eBook Formats

    - ePub, PDF, MOBI, and More
    - Autodesk Inventor File Types Compatibility with Devices
    - Autodesk Inventor File Types Enhanced eBook Features
7. Enhancing Your Reading Experience
    - Adjustable Fonts and Text Sizes of Autodesk Inventor File Types
    - Highlighting and Note-Taking Autodesk Inventor File Types
    - Interactive Elements Autodesk Inventor File Types
8. Staying Engaged with Autodesk Inventor File Types
    - Joining Online Reading Communities
    - Participating in Virtual Book Clubs
    - Following Authors and Publishers Autodesk Inventor File Types
9. Balancing eBooks and Physical Books Autodesk Inventor File Types
    - Benefits of a Digital Library
    - Creating a Diverse Reading Collection Autodesk Inventor File Types
10. Overcoming Reading Challenges
    - Dealing with Digital Eye Strain
    - Minimizing Distractions
    - Managing Screen Time
11. Cultivating a Reading Routine Autodesk Inventor File Types
    - Setting Reading Goals Autodesk Inventor File Types
    - Carving Out Dedicated Reading Time
12. Sourcing Reliable Information of Autodesk Inventor File Types
    - Fact-Checking eBook Content of Autodesk Inventor File Types
    - Distinguishing Credible Sources
13. Promoting Lifelong Learning
    - Utilizing eBooks for Skill Development
    - Exploring Educational eBooks
14. Embracing eBook Trends
    - Integration of Multimedia Elements
    - Interactive and Gamified eBooks

Autodesk Inventor File Types Introduction

In the digital age, access to information has become easier than ever before. The ability to download Autodesk Inventor File Types has revolutionized the way we consume written content. Whether you are a student looking for course material, an avid reader searching for your next favorite book, or a professional seeking research papers, the option to download Autodesk Inventor File Types has opened up a world of possibilities. Downloading Autodesk Inventor File Types provides numerous advantages over physical copies of books and documents. Firstly, it is incredibly convenient. Gone are the days of carrying around heavy textbooks or bulky folders filled with papers. With the click of a button, you can gain immediate access to valuable resources on any device. This convenience allows for efficient studying, researching, and reading on the go. Moreover, the cost-effective nature of downloading Autodesk Inventor File Types has democratized knowledge. Traditional books and academic journals can be expensive, making it difficult for individuals with limited financial resources to access information. By offering free PDF downloads, publishers and authors are enabling a wider audience to benefit from their work. This inclusivity promotes equal opportunities for learning and personal growth. There are numerous websites and platforms where individuals can download Autodesk Inventor File Types. These websites range from academic databases offering research papers and journals to online libraries with an expansive collection of books from various genres. Many authors and publishers also upload their work to specific websites, granting readers access to their content without any charge. These platforms not only provide access to existing literature but also serve as an excellent platform for undiscovered authors to share their work with the world. However, it is essential to be cautious while downloading Autodesk Inventor File Types. Some websites may offer pirated or illegally obtained copies of copyrighted material. Engaging in such activities not only violates copyright laws but also undermines the efforts of authors, publishers, and researchers. To ensure ethical downloading, it is advisable to utilize reputable websites that prioritize the legal distribution of content. When downloading Autodesk Inventor File Types, users should also consider the potential security risks associated with online platforms. Malicious actors may exploit vulnerabilities in unprotected websites to distribute malware or steal personal information. To protect themselves, individuals should ensure their devices have reliable antivirus software installed and validate the legitimacy of the websites they are downloading from. In conclusion, the ability to download Autodesk Inventor File Types has transformed the way we access information. With the convenience, cost-effectiveness, and accessibility it offers, free PDF downloads have become a popular choice for students, researchers, and book lovers worldwide. However, it is crucial to engage in ethical downloading practices and prioritize personal security when utilizing online platforms. By doing so, individuals can make the most of the vast array of free PDF resources available and embark on a journey of continuous learning and intellectual growth.

FAQs About Autodesk Inventor File Types Books

1. Where can I buy Autodesk Inventor File Types books? Bookstores: Physical bookstores like Barnes & Noble, Waterstones, and independent local stores. Online Retailers: Amazon, Book Depository, and various online bookstores offer a wide range of books in physical and digital formats.
2. What are the different book formats available? Hardcover: Sturdy and durable, usually more expensive. Paperback: Cheaper, lighter, and more portable than hardcovers. E-books: Digital books available for e-readers like Kindle or software like Apple Books, Kindle, and Google Play Books.
3. How do I choose a Autodesk Inventor File Types book to read? Genres: Consider the genre you enjoy (fiction, non-fiction, mystery, sci-fi, etc.). Recommendations: Ask friends, join book clubs, or explore online reviews and recommendations. Author: If you like a particular author, you might enjoy more of their work.
4. How do I take care of Autodesk Inventor File Types books? Storage: Keep them away from direct sunlight and in a dry environment. Handling: Avoid folding pages, use bookmarks, and handle them with clean hands. Cleaning: Gently dust the covers and pages occasionally.
5. Can I borrow books without buying them? Public Libraries: Local libraries offer a wide range of books for borrowing. Book Swaps: Community book exchanges or online platforms where people exchange books.
6. How can I track my reading progress or manage my book collection? Book Tracking Apps: Goodreads, LibraryThing, and Book Catalogue are popular apps for tracking your reading progress and managing book collections. Spreadsheets: You can create your own spreadsheet to track books read, ratings, and other details.
7. What are Autodesk Inventor File Types audiobooks, and where can I find them? Audiobooks: Audio recordings of books, perfect for listening while commuting or multitasking. Platforms: Audible, LibriVox, and Google Play Books offer a wide selection of audiobooks.
8. How do I support authors or the book industry? Buy Books: Purchase books from authors or independent bookstores. Reviews: Leave reviews on platforms like Goodreads or Amazon. Promotion: Share your favorite books on social media or recommend them to friends.
9. Are there book clubs or reading communities I can join? Local Clubs: Check for local book clubs in libraries or community centers. Online Communities: Platforms like Goodreads have virtual book clubs and discussion groups.
10. Can I read Autodesk Inventor File Types books for free? Public Domain Books: Many classic books are available for free as theyre in the public domain. Free E-books: Some websites offer free e-books legally, like Project Gutenberg or Open Library.

Find Autodesk Inventor File Types :

center hill lake tennessee fishing guide
~~cellular respiration breaking down energy worksheet answer key~~
celebrity biographies the amazing life of samuel jackson biography series
celestial navigation study guide
cdl study guide texas
ceccato aria compressor manual
ce 2208 lab manual for civil
ceh all in one exam guide
cd corps diplomatique tcd corps diplomatique deuxiegraveme partie
cellular respiration seed germination lab college board
celpip study guide for
cells building blocks of life answers
ce soir et agrave jamais
~~century 1 autopilot installation manual~~
cebs learning guide 2nd edition

Autodesk Inventor File Types :

chemthink ionic bonding simbucket - Sep 03 2022
web chemical formula tells the relative number of atoms of each element in a compound molecular covalent bonding formula represents the of atoms of each element in a
chemthink ion formation simbucket - May 31 2022
web dec 10 2014 in this chemthink tutorial you will explore ionic formulas and take a short quiz topics include positive and negative ions chemthink covalent bonding
chemthink simbucket - Oct 24 2021

chemthink ionic formulas simbucket - May 11 2023
web study with quizlet and memorize flashcards containing terms like ionic bonds are formed between and involved the of ions charges that are alike will each other

chemthink ionic formulas simbucket - Oct 04 2022
web chemthink com s tutorial for our chapter 8 ionic bonding is use as an introduction to the chapter also i explained how to do flash cards for memorize ions sheet being printed for
solved chemthink ionic formulas docx chem think ionic - Mar 09 2023
web ionic vs covalent key formative work reading assignment 1 the world of chemistry episode 8 chemical bonds ions their charges key naming
chemthink ionic bonding flashcards quizlet - Apr 10 2023
web expert answer 100 1 rating transcribed image text chemthink ionic formulas docx chem think ionic formulas noble gases never form atoms react with each other to
chemthink com ch 8 ionic bonding questions part 1 - Jul 01 2022
web 1 chemthink ionic formulas 1 docx 2 chemthink ionic bonding ionic bonds are formed between ions and involved the transfer
5 5 writing formulas for ionic compounds chemistry - Jun 12 2023
web sep 25 2022 write the correct formula for an ionic compound recognize polyatomic ions in chemical formulas ionic compounds do not exist as molecules in the solid state
chemthink ionic formulas simbucket chemthink ionic - Nov 05 2022
web apr 28 2022 best answer copy x would be the metal in ionic formulas these equations you will be solving for x and x alone every time wiki user 9y ago this
what is x for chemthink ionic formulas answers - Aug 02 2022
web nov 4 2022 examine with quizlet and memorize flashcards containing phrases like binary compound 33 terms ionic bonds are formed between and involved the of ions
chemthink ionic compounds key lps - Aug 14 2023
web when atoms react to form of electrons that are equal to the total number of electrons that are the total number must always be formula ion total formula total formula
simulations simbucket - Jan 27 2022

formative work and answer keys unit 2 mrs terry s science - Feb 08 2023
web chemthink ionic formulas link noble gases never form atoms react with each other to become atoms form ions that have the same number of as noble
chemthink ionic bonding docx chemthink ionic bonding - Feb 25 2022

web conclusion and can bond together by forming an ionic bond when multiple ion pairs are attracted to each other it forms an ionic

chemthink ionic formulas pdf chemthink ionic formulas - Jan 07 2023

web in this chemthink tutorial you will explore ionic formulas and take a short quiz topics include positivity and negative ions balancing definite press negative charges text ionic

ionic formula writing flashcards quizlet - Apr 29 2022

web chemthink ionic bonding ionic bonds are formed between and involved the of ions charges that are alike will each other while opposite in ionic

chemthink ionic bonding simbucket - Dec 26 2021

chemthink com ch 8 ionic bonding questions - Nov 24 2021

chemthink ionic bonding flashcards quizlet - Jul 13 2023

web study with quizlet and memorize flashcards containing terms like ionic bonds are formed between and involved the of ions charges that are alike will each

chemthink ionic formulas docx chemthink ionic - Dec 06 2022

web chemthink ionic formulas noble gases never form atoms react with each other to become atoms form ions that have the same number of as noble gases

chemthink ionic formulas athens mutual student corner - Mar 29 2022

web try upgrading your browser to the latest version what is a browser microsoft internet explorer mozilla firefox google chrome apple safari

home simbucket - Sep 22 2021

read free la da c mocratie repra c sentative est elle en cr - Apr 17 2023

web la da c mocratie repra c sentative est elle en cr vignaud pamphlets apr 10 2022 lettres sur l amérique du nord jul 21 2020 participation and self management jan 15 2020 histoire Économique et sociale du québec 1760 1850 dec 18 2022 qu est ce qu une règle de droit

free la da c mocratie repra c sentative est elle en cr - Mar 16 2023

web la da c mocratie repra c sentative est elle en cr oeuvres complètes de h de balzac mar 26 2022 la poésie est elle encore possible being notices of the works of t bernard and a millien jun 09 2023 estelle a poem in six cantos mar 14 2021 l

instruction religieuse dans l ecole conference faite au cirque d hiver par paul bert

la dÃ mocratie menacÃ e rÃ silience des institutions reprÃ - Jun 19 2023

web les dÃ mocraties reprÃ sentatives sont de nos jours confrontÃ es Ã des transformations majeures apportÃ es par les procÃ s de globalisation lâ affirmation de nouvelles technologies de communication et par la diffusion dâ un discrÃ dit croissant du personnel politique

s est démocratisé traduction anglaise linguee - Mar 04 2022

web veuillez choisir une raison pour justifier votre évaluation de la traduction cet exemple ne correspond à la traduction ci dessus les mots surlignés ne correspondent pas ce résultat ne correspond pas à ma recherche cet exemple ne correspond pas à l entrée en orange la traduction est fausse ou de mauvaise qualité

la da c mocratie repra c sentative est elle en cr uniport edu - Jun 07 2022

web may 7 2023 la da c mocratie repra c sentative est elle en cr 2 6 downloaded from uniport edu ng on may 7 2023 by guest decreases the variety of goods countries produce and export in particular in low income and developing countries we argue that this happens through at least two channels first gender gaps in opportunity such as lower

la da c mocratie repra c sentative est elle en cr copy - May 06 2022

web may 31 2023 la da c mocratie repra c sentative est elle en cr 2 7 downloaded from uniport edu ng on may 31 2023 by guest death and salvation in ancient egypt jan assmann 2005 10 13 human beings the acclaimed egyptologist jan assmann writes are the animals that have to live with the knowledge of their death

la da c mocratie repra c sentative est elle en cr full pdf - Feb 15 2023

web la da c mocratie repra c sentative est elle en cr comparison of thumb kinematics and kinetics between two touch sensitive modes of the sony playstation 2 controller il s adresse également aux futurs professionnels de la santé tels que les étudiants en biologie médecine pharmacie et soins infirmiers

la da c mocratie repra c sentative est elle en cr - Oct 23 2023

web la da c mocratie repra c sentative est elle en cr daily life in ancient egypt jul 21 2021 focusing on the experience of a young girl and her family this book recreates the daily life of middle class residents of the ancient town of lahun during egypt s middle kingdom or classical age after

la da c mocratie repra c sentative est elle en cr pdf - Oct 11 2022

web 23 11 2023 by guest 2 8 la da c mocratie repra c sentative est elle en cr that they follow 3 unbreakable rules including eating only unlimited lean drawing on the diverse efforts of scholars dealers and collectors galassi establishes here for the first time the coherence and significance of early outdoor painting in italy

ebook la da c mocratie repra c sentative est elle en cr - Jan 14 2023

web la da c mocratie repra c sentative est elle en cr environmental sampling for trace analysis sep 05 2021 often too little attention is given to the sampling before and after actual instrumental measurement this leads to errors despite increasingly sensitive analytical systems this is one of the first books to pay proper attention to

la da c mocratie repra c sentative est elle en cr full pdf - May 18 2023

web la da c mocratie repra c sentative est elle en cr jan 24 2021 fault injection techniques and tools for embedded systems reliability evaluation nov 21 2020 our society is faced with an increasing dependence on computing systems not only in high tech consumer applications but also in areas e g air and railway traffic control nuclear plant

la da c mocratie repra c sentative est elle en cr luciano - Aug 21 2023

web publication la da c mocratie repra c sentative est elle en cr that you are looking for it will entirely squander the time however below subsequent to you visit this web page it will be consequently no question easy to get as capably as download guide la da c mocratie repra c sentative est elle en cr it will not take on many period as we run

la da c mocratie repra c sentative est elle en cr austin 1901 - Dec 13 2022

web la da c mocratie repra c sentative est elle en cr getting the books la da c mocratie repra c sentative est elle en cr now is not type of challenging means you could not deserted going taking into account ebook increase or library or borrowing from your links to entry them this is an entirely simple means to specifically get lead by on line

la da c mocratie repra c sentative est elle en cr 2022 - Sep 22 2023

web 4 la da c mocratie repra c sentative est elle en cr 2022 11 18 university of cambridge this is a truly global and politically challenging book bringing together top level researchers and sharply tackling its themes people from every corner of the planet and from all walks in the social sciences will surely profit from reading it

orthograp les valeurs de la lettre c la let tre c se prononce 11 1 - Jul 20 2023

web les valeurs de la lettre c la let tre c se prononce 11 1 devant a o u cana d devant c la lettre c se prononce isl devant e i y chon devant a o u si ell porte une cédille en fin de mot suivi de le lettre h ce2 c se prononce k c est muet c se prononce ch una erv c se prononce k created date 9 6 2021 12 40 32 am

la démocratie représentative est elle en crise by luc rouban - Jul 08 2022

web may 27 2023 la démocratie représentative est elle en crise by luc rouban la démocratie représentative est elle en crise by luc rouban liebesfestival 2016 getting ready amp outfits zuckerlfarben famille de siebenthal la d mocratie confisqu e 2 nadoulek net l organisation mondiale du merce et le d clin de la d lfi les orientations

la da c mocratie repra c sentative est elle en cr austin 1901 - Sep 10 2022

web la da c mocratie repra c sentative est elle en cr right here we have countless ebook la da c mocratie repra c sentative est elle en cr and collections to check out we additionally find the money for variant types and in addition to type of the books to

browse the suitable book fiction history novel scientific research as skillfully as

la da c mocratie repra c sentative est elle en cr copy - Nov 12 2022

web aug 20 2023 la da c mocratie repra c sentative est elle en cr 2 7 downloaded from uniport edu ng on august 20 2023 by guest focus on the abusir saqqara necropolis in the old kingdom a study and interpretation of the archaeological remains and literary sources form the main themes of interest among the contributions but the most characteristic

la da c mocratie repra c sentative est elle en cr uniport edu - Aug 09 2022

web jun 18 2023 la da c mocratie repra c sentative est elle en cr 2 8 downloaded from uniport edu ng on june 18 2023 by guest reveals collective tensions throughout those societies whose material bases have been profoundly shaken by a series of adjustments dictated by the canons of the globalized economy it is an essential guide to the latest

traduction de se caractérise en anglais reverso context - Apr 05 2022

web a cyclone is a depression which is characterized by its rotation traductions en contexte de se caractérise en français anglais avec reverso context l invention se caractérise procédé se caractérise se caractérise par le fait invention se

heroinas secretas de la historia de espana plan b download - Mar 29 2022

web heroinas secretas de la historia de espana plan b caras de la historia i trayectorias de los estudios de género el civilizador o historia de la humanidad por sus grandes hombres las heroínas silenciadas en las independencias hispanoamericanas the murmuring coast heroínas de ficción historia de la revolucion francesa las heroínas

heroínas secretas de la historia de españa somos b - Sep 15 2023

web el fisgón histórico nos descubre a través de este libro ilustrado la vida de más de 25 mujeres que han sido clave s en la historia de españa sabes quién fue la primera enfermera de la historia de españa o la primera cirujana

heroínas secretas de la historia de españa plan b paperback amazon de - Mar 09 2023

web heroínas secretas de la historia de españa plan b el fisgón histórico amazon de books

heroinas secretas de la historia de espana plan b pdf - May 31 2022

web heroinas secretas de la historia de espana plan b 1 heroinas secretas de la historia de espana plan b enfermeras invisibles la historia de maría griselda viva mexico viva la independencia mujeres en la guerra y en los ejércitos a room of one s own annotated heroínas de ficción revista kimelchén junio 2012 living my life

heroínas secretas de la historia de españa plan b el fisgón - Aug 14 2023

web heroínas secretas de la historia de españa plan b el fisgón histórico amazon com tr kitap

heroinas secretas de la historia de espana plan b demo vasista - Feb 25 2022

web historia pintoresca de la franc masoneria y de las sociedades secretas antiguas y modernas el civilizador ó historia de la humanidad por sus grandes hombres heroinas secretas de la historia de espana plan b downloaded from demo vasista in by

guest avery evie women who run with the wolves megustaescribir

amazon es opiniones de clientes heroínas secretas de la historia de - Dec 06 2022

web vea reseñas y calificaciones de reseñas que otros clientes han escrito de heroínas secretas de la historia de españa plan b en amazon com lea reseñas de productos sinceras e imparciales de nuestros usuarios

heroinas secretas de la historia de espana plan b full pdf - Sep 03 2022

web darion jaida heroínas secretas plan b las mujeres han intervenido en las guerras desde que estas se libran y lo han hecho de forma activa mostrándose a favor mediante su participación en el combate la resistencia o la instigación u oponiéndose con la denuncia la protesta o el boicot

heroínas secretas de la historia de españa plan b by el fisgón histórico - Jul 01 2022

web descargar heroínas secretas prar libros de historia antigua en heroinas secretas de la historia de españa descargar pdf heroinas secretas de la historia de españa el fisgón may 20th 2020 heroinas secretas de la historia de españa el fisgón histórico 16 90 el fisgón histórico nos descubre a través de este libro ilustrado la vida de

heroinas secretas de la historia de espana plan b copy - Oct 04 2022

web heroinas secretas de la historia de espana plan b 1 2 heroinas secretas de la historia de espana plan b 2022 11 03 sobre su forma de llevar la adicción a las redes sociales y sobre las secretas relaciones entre consumir mdma y creer en dios por qué la sociedad convierte a niñas aguerridas en adolescentes deprimidas y adultas

heroinas secretas de la historia de espana plan b - Jul 13 2023

web heroinas secretas de la historia de espana plan b heroinas secretas de la historia de espana plan b 2 downloaded from interactivearchivist archivists org on 2022 04 09 by guest on memory in the human sciences has encouraged new approaches to the study of the past as the humanities and social sciences have put into

heroínas secretas de la historia de españa goodreads - Jan 07 2023

web jan 1 2018 el fisgón histórico a través de sorprendentes ilustraciones viene a responder estas y otras preguntas y así contarnos con gracia y destreza la vida de tantas mujeres formidables que siempre debimos tener presentes show more 144 pages paperback published january 1 2018

heroinas secretas de la historia de espana plan b full pdf - Nov 05 2022

web heroinas secretas de la historia de espana plan b critical geopolitics and regional re configurations nov 10 2019 this book seeks to develop our understanding of the contemporary geopolitical reconfigurations of two regions of the world system with high cultural affinity and traditional close relations latin america and europe

heroinas secretas de la historia de espana plan b frank - Aug 02 2022

web the heroinas secretas de la historia de espana plan b it is unquestionably simple then in the past currently we extend the

colleague to purchase and create bargains to download and install heroinas secretas de la historia de espana plan b for that reason simple a brief history of portable literature enrique vila matas 2015 06 09 a reader

heroínas secretas de la historia de españa cultura - Apr 10 2023

web ajouter 5 99 description heroínas secretas de la historia de españa aux éditions plan b el fisgón histórico nos descubre a través de este libro ilustrado la vida de más de 25 mujeres que han sido clave s en la historia de españa sabes quién fu

heroinas secretas de la historia de espana plan b 2022 - Jan 27 2022

web 4 heroinas secretas de la historia de espana plan b 2023 03 22 a man as myself should propose to write his life and memoirs for as a rule one waits until he has accomplished something in the world or until he has reached old age before he ventures to tell of the times in which he has lived and of his part in them

heroinas secretas de la historia de espaÑa casa del - Jun 12 2023

web plan b 9788417001322 1 escribe tu opinión historia historia de españa estudios generales sinopsis de heroinas secretas de la historia de espaÑa el fisgón histórico nos descubre a través de este libro ilustrado la vida de más de 25 mujeres que han sido clave s en la historia de españa

heroínas secretas de la historia de españa estandarte - May 11 2023

web heroínas secretas de la historia de españa una selección ilustrada de el fisgón histórico 27 de septiembre de 2020 estandarte com qué heroínas secretas de la historia de españa autor juan de aragón editorial el fisgón histórico plan b año 2018 páginas 128 precio 17 90

heroínas secretas de la historia de españa tapa blanda cómic de - Feb 08 2023

web el fisgón histórico nos descubre a través de este libro ilustrado la vida de más de 25 mujeres que han sido clave s en la historia de españa sabes quién fue la primera enfermera de la historia de españa o la primera cirujana te enteraste de que una mujer en el siglo xv se disfrazó de hombre para luchar con las armas de su

heroinas secretas de la historia de espana plan b - Apr 29 2022

web heroinas secretas de la historia de espana plan b heroínas secretas trayectorias de los estudios de género in the time of the butterflies as agentes secretas de paris revista kimelchén junio 2012 heroinas americanas mujeres en la guerra y en los ejércitos desde el légamo heroínas de ficción irena s children the art of seduction