1995 Sidekick or Tracker AC schem.

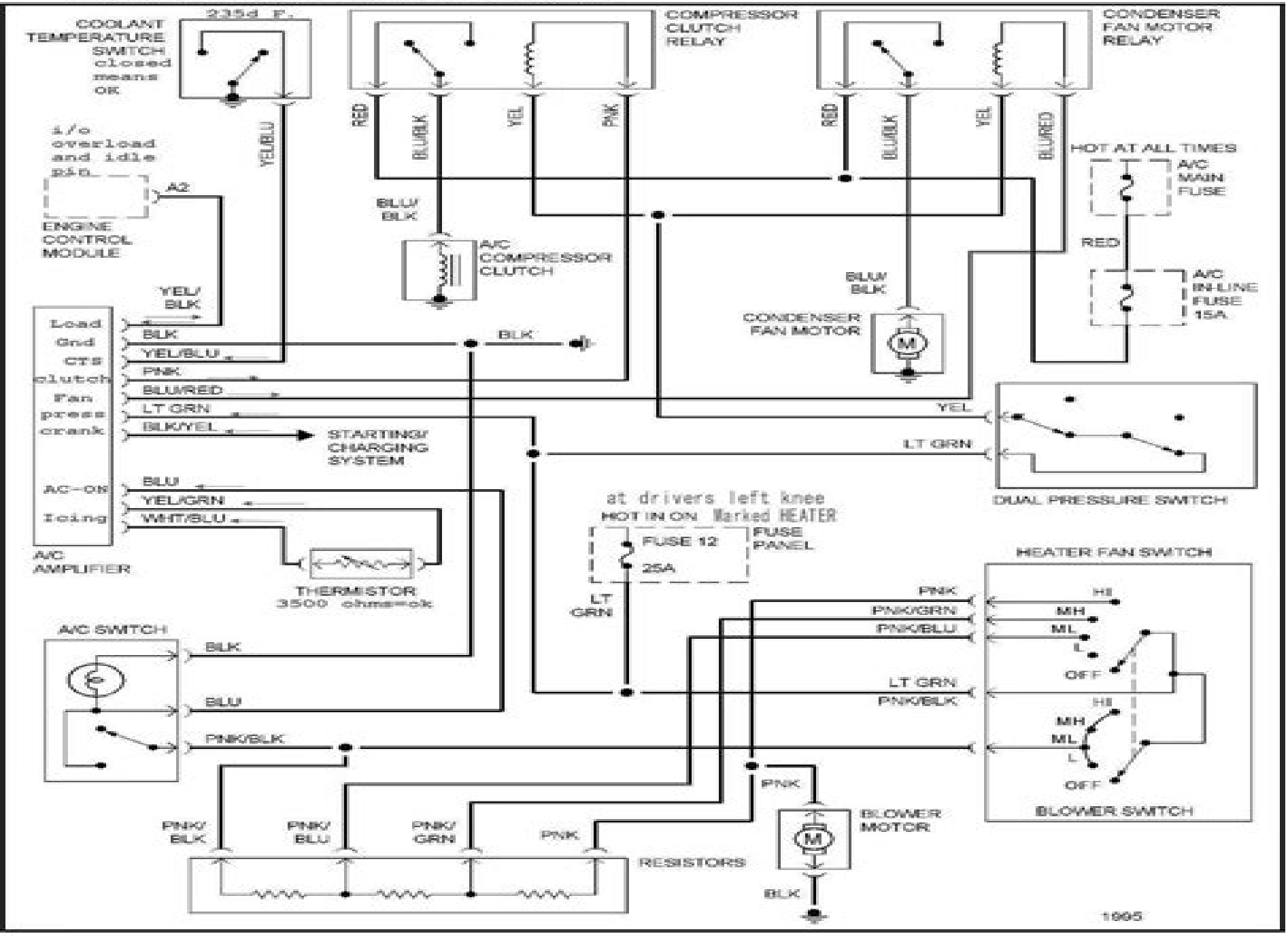

FIXKICK.COM Annotations

Chevy Tracker Wiring Guide

K Payea

Chevy Tracker Wiring Guide:

The Enigmatic Realm of **Chevy Tracker Wiring Guide**: Unleashing the Language is Inner Magic

In a fast-paced digital era where connections and knowledge intertwine, the enigmatic realm of language reveals its inherent magic. Its capacity to stir emotions, ignite contemplation, and catalyze profound transformations is nothing lacking extraordinary. Within the captivating pages of **Chevy Tracker Wiring Guide** a literary masterpiece penned by a renowned author, readers set about a transformative journey, unlocking the secrets and untapped potential embedded within each word. In this evaluation, we shall explore the book is core themes, assess its distinct writing style, and delve into its lasting impact on the hearts and minds of people who partake in its reading experience.

https://droplet2026.furrfu.com/data/Resources/index.jsp/ingersoll%20dresser%20pump%20manual.pdf

Table of Contents Chevy Tracker Wiring Guide

1. Understanding the eBook Chevy Tracker Wiring Guide
    - The Rise of Digital Reading Chevy Tracker Wiring Guide
    - Advantages of eBooks Over Traditional Books
2. Identifying Chevy Tracker Wiring Guide
    - Exploring Different Genres
    - Considering Fiction vs. Non-Fiction
    - Determining Your Reading Goals
3. Choosing the Right eBook Platform
    - Popular eBook Platforms
    - Features to Look for in an Chevy Tracker Wiring Guide
    - User-Friendly Interface
4. Exploring eBook Recommendations from Chevy Tracker Wiring Guide
    - Personalized Recommendations
    - Chevy Tracker Wiring Guide User Reviews and Ratings
    - Chevy Tracker Wiring Guide and Bestseller Lists

5. Accessing Chevy Tracker Wiring Guide Free and Paid eBooks
    - Chevy Tracker Wiring Guide Public Domain eBooks
    - Chevy Tracker Wiring Guide eBook Subscription Services
    - Chevy Tracker Wiring Guide Budget-Friendly Options
6. Navigating Chevy Tracker Wiring Guide eBook Formats
    - ePub, PDF, MOBI, and More
    - Chevy Tracker Wiring Guide Compatibility with Devices
    - Chevy Tracker Wiring Guide Enhanced eBook Features
7. Enhancing Your Reading Experience
    - Adjustable Fonts and Text Sizes of Chevy Tracker Wiring Guide
    - Highlighting and Note-Taking Chevy Tracker Wiring Guide
    - Interactive Elements Chevy Tracker Wiring Guide
8. Staying Engaged with Chevy Tracker Wiring Guide
    - Joining Online Reading Communities
    - Participating in Virtual Book Clubs
    - Following Authors and Publishers Chevy Tracker Wiring Guide
9. Balancing eBooks and Physical Books Chevy Tracker Wiring Guide
    - Benefits of a Digital Library
    - Creating a Diverse Reading Collection Chevy Tracker Wiring Guide
10. Overcoming Reading Challenges
    - Dealing with Digital Eye Strain
    - Minimizing Distractions
    - Managing Screen Time
11. Cultivating a Reading Routine Chevy Tracker Wiring Guide
    - Setting Reading Goals Chevy Tracker Wiring Guide
    - Carving Out Dedicated Reading Time
12. Sourcing Reliable Information of Chevy Tracker Wiring Guide
    - Fact-Checking eBook Content of Chevy Tracker Wiring Guide
    - Distinguishing Credible Sources
13. Promoting Lifelong Learning

    - Utilizing eBooks for Skill Development
    - Exploring Educational eBooks
14. Embracing eBook Trends
    - Integration of Multimedia Elements
    - Interactive and Gamified eBooks

Chevy Tracker Wiring Guide Introduction

In this digital age, the convenience of accessing information at our fingertips has become a necessity. Whether its research papers, eBooks, or user manuals, PDF files have become the preferred format for sharing and reading documents. However, the cost associated with purchasing PDF files can sometimes be a barrier for many individuals and organizations. Thankfully, there are numerous websites and platforms that allow users to download free PDF files legally. In this article, we will explore some of the best platforms to download free PDFs. One of the most popular platforms to download free PDF files is Project Gutenberg. This online library offers over 60,000 free eBooks that are in the public domain. From classic literature to historical documents, Project Gutenberg provides a wide range of PDF files that can be downloaded and enjoyed on various devices. The website is user-friendly and allows users to search for specific titles or browse through different categories. Another reliable platform for downloading Chevy Tracker Wiring Guide free PDF files is Open Library. With its vast collection of over 1 million eBooks, Open Library has something for every reader. The website offers a seamless experience by providing options to borrow or download PDF files. Users simply need to create a free account to access this treasure trove of knowledge. Open Library also allows users to contribute by uploading and sharing their own PDF files, making it a collaborative platform for book enthusiasts. For those interested in academic resources, there are websites dedicated to providing free PDFs of research papers and scientific articles. One such website is Academia.edu, which allows researchers and scholars to share their work with a global audience. Users can download PDF files of research papers, theses, and dissertations covering a wide range of subjects. Academia.edu also provides a platform for discussions and networking within the academic community. When it comes to downloading Chevy Tracker Wiring Guide free PDF files of magazines, brochures, and catalogs, Issuu is a popular choice. This digital publishing platform hosts a vast collection of publications from around the world. Users can search for specific titles or explore various categories and genres. Issuu offers a seamless reading experience with its user-friendly interface and allows users to download PDF files for offline reading. Apart from dedicated platforms, search engines also play a crucial role in finding free PDF files. Google, for instance, has an advanced search feature that allows users to filter results by file type. By specifying the file type as "PDF," users can find websites that offer free PDF downloads on a specific topic. While downloading Chevy Tracker Wiring Guide free PDF files is convenient, its

important to note that copyright laws must be respected. Always ensure that the PDF files you download are legally available for free. Many authors and publishers voluntarily provide free PDF versions of their work, but its essential to be cautious and verify the authenticity of the source before downloading Chevy Tracker Wiring Guide. In conclusion, the internet offers numerous platforms and websites that allow users to download free PDF files legally. Whether its classic literature, research papers, or magazines, there is something for everyone. The platforms mentioned in this article, such as Project Gutenberg, Open Library, Academia.edu, and Issuu, provide access to a vast collection of PDF files. However, users should always be cautious and verify the legality of the source before downloading Chevy Tracker Wiring Guide any PDF files. With these platforms, the world of PDF downloads is just a click away.

FAQs About Chevy Tracker Wiring Guide Books

What is a Chevy Tracker Wiring Guide PDF? A PDF (Portable Document Format) is a file format developed by Adobe that preserves the layout and formatting of a document, regardless of the software, hardware, or operating system used to view or print it. **How do I create a Chevy Tracker Wiring Guide PDF?** There are several ways to create a PDF: Use software like Adobe Acrobat, Microsoft Word, or Google Docs, which often have built-in PDF creation tools. Print to PDF: Many applications and operating systems have a "Print to PDF" option that allows you to save a document as a PDF file instead of printing it on paper. Online converters: There are various online tools that can convert different file types to PDF. **How do I edit a Chevy Tracker Wiring Guide PDF?** Editing a PDF can be done with software like Adobe Acrobat, which allows direct editing of text, images, and other elements within the PDF. Some free tools, like PDFescape or Smallpdf, also offer basic editing capabilities. **How do I convert a Chevy Tracker Wiring Guide PDF to another file format?** There are multiple ways to convert a PDF to another format: Use online converters like Smallpdf, Zamzar, or Adobe Acrobats export feature to convert PDFs to formats like Word, Excel, JPEG, etc. Software like Adobe Acrobat, Microsoft Word, or other PDF editors may have options to export or save PDFs in different formats. **How do I password-protect a Chevy Tracker Wiring Guide PDF?** Most PDF editing software allows you to add password protection. In Adobe Acrobat, for instance, you can go to "File" -> "Properties" -> "Security" to set a password to restrict access or editing capabilities. Are there any free alternatives to Adobe Acrobat for working with PDFs? Yes, there are many free alternatives for working with PDFs, such as: LibreOffice: Offers PDF editing features. PDFsam: Allows splitting, merging, and editing PDFs. Foxit Reader: Provides basic PDF viewing and editing capabilities. How do I compress a PDF file? You can use online tools like Smallpdf, ILovePDF, or desktop software like Adobe Acrobat to compress PDF files without significant quality loss. Compression reduces the file size, making it easier to share and download. Can I fill out forms in a PDF file? Yes, most PDF viewers/editors like Adobe Acrobat, Preview (on

Mac), or various online tools allow you to fill out forms in PDF files by selecting text fields and entering information. Are there any restrictions when working with PDFs? Some PDFs might have restrictions set by their creator, such as password protection, editing restrictions, or print restrictions. Breaking these restrictions might require specific software or tools, which may or may not be legal depending on the circumstances and local laws.

Find Chevy Tracker Wiring Guide :

ingersoll dresser pump manual
practice 8 4 properties of logarithms answer key
~~question out paper j s c~~
link belt ls98 manual
~~takeuchi tb1140 compact excavator parts manual sn 51410002 and up~~
~~spanish language guides~~
hidden job market
~~ingenuity in a can the ralph stolle story~~
fishermans wharf cookbook
~~2002 holden rodeo service manual~~
where can i buy a car manual
who fears death
83 honda cl250s service manual
~~network plus certification study guide~~
1982 honda rebel 250 owners manual

Chevy Tracker Wiring Guide :

free messenger nokia c7 java apps mobiles24 - Sep 02 2023
web download free messenger nokia c7 java apps software to your java mobile phone free messenger nokia c7 java apps you can download to your nokia samsung and
wechat free messaging and calling app - Nov 23 2022
web tersedia untuk semua jenis platform nikmati obrolan grup mendukung pesan suara foto video dan teks
wechat weixin for web - Jan 26 2023

web switch account tip web wechat requires the use browser cookies to help you log in to allow the web application to function more information

we chat nokia c7 java pdf emidproxy vaccination gov - Jul 20 2022

web unveiling the power of verbal beauty an emotional sojourn through we chat nokia c7 java in a global inundated with monitors and the cacophony of quick communication the

free communication social networking nokia c7 java apps - Aug 01 2023

web found 389 free communication social networking nokia c7 java apps download nokia c7 software for free to your symbian phone or tablet page 10

we chat nokia c7 java test reportandsupport gold ac - Nov 11 2021

web may 25 2023 we chat nokia c7 java we chat nokia c7 java download aplikasi wechat untuk hp nokia java wechat 1 5 wechat for web aplikasi nokia

we chat nokia c7 java edms ncdmb gov ng - Apr 16 2022

web sep 15 2023 we chat nokia c7 java nokia c7 vs nokia c6 01 phone specs comparison wechat for web download free java software download wechat for java

wechat for nokia java orientation sutd edu sg - Oct 23 2022

web wechat for nokia java wechat 4 2 nokia e72 basedroid get wechat microsoft store download wechat for java phones jar jad file free wechat nokia 5230 java apps

we chat nokia c7 java trade inredemption sonymobile - Jan 14 2022

web we chat nokia c7 java we chat nokia c7 java telegram messaging app jar for nokia symbian mobiles free wechat mobile9 vchat for nokia c7 websites wechat com free

wechat 8 0 37 download techspot - May 30 2023

web aug 5 2023 popular apps in instant messaging download wechat free text messaging and free video calls with more than 300 million people now also available for windows

wechat for nokia java cyberlab sutd edu sg - Oct 03 2023

web wechat for nokia java multimedia messaging service feb 15 2021 the multimedia messaging service mms is regarded as the best of the breed of proven messaging

nfc interactor for the nokia c7 603 701 and 700 all about - Dec 25 2022

web feb 26 2012 nfc interactor for the nokia c7 603 701 and 700 no nfc interactor isn t a new smartphone particle weapon plug in it s actually a cool diagnostic for tag reading

we chat nokia c7 java reserve lasd org - Feb 12 2022

web we chat nokia c7 java wechat now available for nokia asha x3 and c3 s40 java wechat download aplikasi nokia free wechat nokia n8 java apps mobiles24

we chat nokia c7 java demo waroengss com - Dec 13 2021

web download we chat for nokia java phones downloadfreefile club may 6th 2018 download we chat for nokia java messenger app is an open source with lots of download we chat

nokia c7 gadgets now - Feb 24 2023

web nokia c7 online is available at the best prices in india check nokia c7 mobile phone specifications with its features user review images critic review comparison and

we chat nokia c7 java orientation sutd edu sg - Jun 30 2023

web we chat nokia c7 java wechat for ios free download and software reviews cnet may 8th 2018 wechat enables you to connect in a variety of ways with your contacts all

wechat free messaging and calling app - Apr 28 2023

web available for all kinds of platforms enjoy group chat support voice photo video and text messages

we chat nokia c7 java pdf ftp vape mexico - Sep 21 2022

web we chat nokia c7 java 3 3 os being ported contains an in depth explanation of how symbian os drivers work device drivers have changed considerably with the

wechat for windows □□ - Mar 28 2023

web available for all kinds of platforms enjoy group chat support voice photo video and text messages

we chat nokia c7 java graphscan cookiefirst - Jun 18 2022

web jun 8 2023 this we chat nokia c7 java but end up in harmful downloads it would not consent repeatedly as we communicate before this we chat nokia c7 java as

wechat for nokia java orientation sutd edu sg - Aug 21 2022

web wechat for nokia java may 6th 2018 download wechat for java nokia c3 download wechat for java nokia c3 blazingly fast registration with your phone number littlest pet

we chat nokia c7 java rhur impacthub net - Mar 16 2022

web sep 14 2023 may 6th 2018 download we chat for nokia java messenger app is an open source with lots of download we chat for nokia java phones features and can be used

pdf wechat for nokia java cyberlab sutd edu sg - May 18 2022

web wechat for nokia java multimedia messaging service jan 21 2021 the multimedia messaging service mms is regarded as the best of the breed of proven messaging

bad moon rising a dark hunter novel 13 dark hunter novels - Nov 29 2022
web buy bad moon rising a dark hunter novel 13 dark hunter novels by kenyon sherrilyn from amazon s fiction books store everyday low prices on a huge range of new releases and classic fiction
amazon com customer reviews bad moon rising a dark hunter novel - Jul 26 2022
web find helpful customer reviews and review ratings for bad moon rising a dark hunter novel dark hunter novels book 17 at amazon com read honest and unbiased product reviews from our users
bad moon rising a dark hunter novel dark hunter novels 13 - Mar 22 2022
web mar 30 2010 bad moon rising a dark hunter novel dark hunter novels 13 paperback march 30 2010 by sherrilyn kenyon author 4 7 4 7 out of 5 stars 1 440 ratings
bad moon rising macmillan - Apr 03 2023
web aug 4 2009 bad moon rising a dark hunter novel dark hunter novels volume 13 author sherrilyn kenyon read by holter graham about this book a stunning and suspenseful new landscape emerges in the thrilling dark hunter world a world where nothing will ever be the same again genre romance on sale 08 04 2009 book details
bad moon rising macmillan - Mar 02 2023
web mar 30 2010 book details fang kattalakis isn t just a wolf he is the brother of two of the most powerful members of the omegrion the ruling council that enforces the laws of the were hunters when war erupts among the lycanthropes sides must be chosen enemies must become allies
bad moon rising macmillan - Feb 01 2023
web aug 4 2009 bad moon rising a dark hunter novel dark hunter novels volume 13 author sherrilyn kenyon about this book a stunning and suspenseful new landscape emerges in the thrilling dark hunter world a world where nothing will ever be the same again page count 352 genre romance on sale 08 04 2009 book details
bad moon rising a dark hunter novel google books - Feb 18 2022
web he is the brother of two of the most powerful members of the omegrion the ruling council that enforces the laws of the were hunters and when war erupts among the lycanthropes sides must be
bad moon rising a dark hunter novel google books - Aug 07 2023
web mar 30 2010 bad moon rising a dark hunter novel sherrilyn kenyon st martin s publishing group mar 30 2010 fiction 352 pages a stunning and suspenseful new landscape emerges in the thrilling
bad moon rising a dark hunter novel dark hunter novels - Sep 08 2023
web aug 4 2009 a stunning and suspenseful new landscape emerges in the thrilling dark hunter world a world where nothing will ever be the same again fang kattalakis isn t just a wolf he is the brother of two of the most powerful members of

the omegrion the ruling council that enforces the laws of the were hunters

bad moon rising by sherrilyn kenyon goodreads - Jul 06 2023

web aug 4 2009 sherrilyn kenyon 4 27 29 843 ratings1 091 reviews a stunning and suspenseful new landscape emerges in the thrilling dark hunter world a world where nothing will ever be the same again fang kattalakis isn t just a wolf

bad moon rising a dark hunter novel mass market paperback - Oct 29 2022

web mar 30 2010 over the years her lords of avalon novels have been adapted by marvel and her dark hunters and chronicles of nick are new york times bestselling manga and comics and are 1 bestselling adult coloring books

bad moon rising a dark hunter novel dark hunter novels 13 - Jun 05 2023

web mar 30 2010 bad moon rising a dark hunter novel dark hunter novels 13 mass market paperback march 30 2010 by sherrilyn kenyon author 4 7 4 7 out of 5 stars 1 441 ratings

bad moon rising on apple books - Dec 31 2022

web aug 4 2009 a stunning and suspenseful new landscape emerges in the thrilling dark hunter world a world where nothing will ever be the same again fang kattalakis isn t just a wolf he is the brother of two of the most powerful members of the omegrion the ruling council that enforces the laws of the were hunters

9780312369491 bad moon rising a dark hunter novel dark - Sep 27 2022

web abebooks com bad moon rising a dark hunter novel dark hunter novels 9780312369491 by kenyon sherrilyn and a great selection of similar new used and collectible books available now at great prices

bad moon rising a dark hunter novel google books - May 04 2023

web bad moon rising a dark hunter novel sherrilyn kenyon google books fang kattalakis isn t just a wolf he is the brother of two of the most powerful members of the omegrion the ruling council

bad moon rising dark hunter abebooks - Jun 24 2022

web bad moon rising a dark hunter novel dark hunter novels by kenyon sherrilyn and a great selection of related books art and collectibles available now at abebooks com bad moon rising dark hunter 214 results you searched for title bad moon rising dark hunter edit your search

bad moon rising dark hunter 17 read novels online - Apr 22 2022

web storyline bad moon rising hellchaser 3 were hunter 5 dark hunter 17 fang kattalakis isn t just a wolf he is the brother of two of the most powerful members of the omegrion the ruling council that enforces the laws of the were hunters and when war erupts among the lycanthropes sides must be chosen

bad moon rising by sherrilyn kenyon audiobook scribd - Aug 27 2022

web a stunning and suspenseful new landscape emerges in the thrilling dark hunter world a world where nothing will ever be

the same again fang kattalakis isn t just a wolf he is the brother of two of the most powerful members of the omegrion the ruling council that enforces the laws of the were hunters and when war erupts among the lycanthropes

bad moon rising a dark hunter novel google books - Oct 09 2023

web aug 4 2009 bad moon rising a dark hunter novel sherrilyn kenyon st martin s publishing group aug 4 2009 fiction 352 pages a stunning and suspenseful new landscape emerges in the thrilling

bad moon rising a dark hunter novel dark hunter novels - May 24 2022

web bad moon rising a dark hunter novel dark hunter novels on amazon com au free shipping on eligible orders bad moon rising a dark hunter novel dark hunter novels

la nomenclature des actes cliniques en - May 01 2023

web apr 9 2018 la hiérarchisation et la valorisation des actes cliniques depuis longtemps réclamées par le synmad et le cregg ont été au centre des dernières discussions

fiches ha c pato gastroenta c rologie chirurgie d hachette - Sep 05 2023

web fiches ha c pato gastroenta c rologie chirurgie d fiches ha c pato gastroenta c rologie chirurgie d 2 downloaded from donate pfi org on 2020 04 01 by guest science

hépato gastro entérologie futur interne - Jan 29 2023

web jul 7 2020 l hépato gastroentérologie est une spécialité vaste et polyvalente regroupant la prise en charge de toutes les maladies du tube digestif et prenant en charge de

fiches ha c pato gastroenta c rologie chirurgie d copy - Nov 14 2021

web jul 29 2023 we give fiches ha c pato gastroenta c rologie chirurgie d and numerous ebook collections from fictions to scientific research in any way in the course of them is

fiches hépato gastro entérologie chirurgie digestive elsevier - Oct 06 2023

web l essentiel des items d hépato gastroentérologie chirurgie digestive en fiches personnalisables et qi par le collège découvre un extrait gratuit et un quiz en ligne

pdf fiches ha c pato gastroenta c rologie chirurgie d - Jun 21 2022

web fiches ha c pato gastroenta c rologie chirurgie d acoustic guitars feb 14 2021 this illustrated encyclopedia to acoustic guitars demonstrates their elegant beauty and which

fiches ha c pato gastroenta c rologie chirurgie d askstage - Oct 26 2022

web 2 fiches ha c pato gastroenta c rologie chirurgie d 2020 03 24 algebra and graphs to present microeconomic theory using actual examples and then encourages students to

fiches ha c pato gastroenta c rologie chirurgie d - Jul 03 2023

web fiches ha c pato gastroenta c rologie chirurgie d fines sive pedes finium sive finales concordiæ in curia domini regis ab anno septimo regni regis ricardi i ad

fiches ha c pato gastroenta c rologie chirurgie d pdf - Sep 24 2022

web 2 fiches ha c pato gastroenta c rologie chirurgie d 2022 11 20 gruesome interrogation techniques the man proves to be the sexiest beast lucifer has ever met

download free fiches ha c pato gastroenta c rologie chirurgie d - Mar 31 2023

web fiches ha c pato gastroenta c rologie chirurgie d journal d urologie et de néphrologie oct 18 2022 the training courses of urological laparoscopy mar 11 2022 the

fiches ha c pato gastroenta c rologie chirurgie d uniport edu - Mar 19 2022

web oct 23 2023 fiches ha c pato gastroenta c rologie chirurgie d 1 1 downloaded from uniport edu ng on october 23 2023 by guest fiches ha c pato gastroenta c rologie

gastroenteroloji İstanbul fatih doktortakvimi com - Feb 15 2022

web gastroenteroloji İç hastalıkları endokrinoloji ve metabolizma hastalıkları daha fazla 213 görüş adnan menderes bulvarı vatan caddesi 34093 fatih harita

fiches ha c pato gastroenta c rologie chirurgie d pdf - Jul 23 2022

web 2 fiches ha c pato gastroenta c rologie chirurgie d 2020 12 11 banker in which the banker argues he is the only true anarchist the big show tor books the beginning of

fiches ha c pato gastroenta c rologie chirurgie d copy - May 21 2022

web oct 15 2023 fiches ha c pato gastroenta c rologie chirurgie d 2 8 downloaded from uniport edu ng on october 15 2023 by guest avicenna recognised pulmonary disease in

fiches ha c pato gastroenta c rologie chirurgie d uniport edu - Apr 19 2022

web fiches ha c pato gastroenta c rologie chirurgie d 1 7 downloaded from uniport edu ng on october 29 2023 by guest fiches ha c pato gastroenta c rologie chirurgie d as

fiches ha c pato gastroenta c rologie chirurgie d - Aug 04 2023

web apr 5 2023 fiches ha c pato gastroenta c rologie chirurgie d thank you enormously much for downloading fiches ha c pato gastroenta c rologie chirurgie d maybe

fiches ha c pato gastroenta c rologie chirurgie d pdf - Jun 02 2023

web fiches ha c pato gastroenta c rologie chirurgie d procès verbaux mémoires et discussions nov 29 2022 chirurgie sep 03 2020 la chirurgie ambulatoire chez le

fiches ha c pato gastroenta c rologie chirurgie d pdf - Dec 28 2022

web fiches ha c pato gastroenta c rologie chirurgie d fiches ha c pato gastroenta c rologie chirurgie d 1 downloaded from donate pfi org on 2020 06 23 by guest fiches

fiches ha c pato gastroenta c rologie chirurgie d margaret - Aug 24 2022

web fiches ha c pato gastroenta c rologie chirurgie d fiches ha c pato gastroenta c rologie chirurgie d 2 downloaded from donate pfi org on 2020 09 14 by guest learning

pathologies et prises en charge hépato gastro entérologie et - Feb 27 2023

web la prise en charge est multidisciplinaire faisant intervenir les services d hépato gastro entérologie de chirurgie digestive d oncologie médicale de radiothérapie de

fiches ha c pato gastroenta c rologie chirurgie d - Jan 17 2022

web an astounding alternate history featuring the talents of john j miller roger zelazny leanne c harper arthur byron cover melina c snodgrass edward bryant stephen

fiches ha c pato gastroenta c rologie chirurgie d bill mascull - Nov 26 2022

web fiches ha c pato gastroenta c rologie chirurgie d fiches ha c pato gastroenta c rologie chirurgie d 2 downloaded from donate pfi org on 2023 04 26 by guest the

fiches ha c pato gastroenta c rologie chirurgie d copy - Dec 16 2021

web sep 2 2023 fiches ha c pato gastroenta c rologie chirurgie d 2 7 downloaded from uniport edu ng on september 2 2023 by guest bibliografia scientifico tecnica italiana