BRIGGS & STRATTON

(en) Operator's Manual

(es) Manual del Operario

(fr) Manuel de l'opérateur

Model 210000
Power Built™
Intek™

Model 310000
Power Built™
Intek™

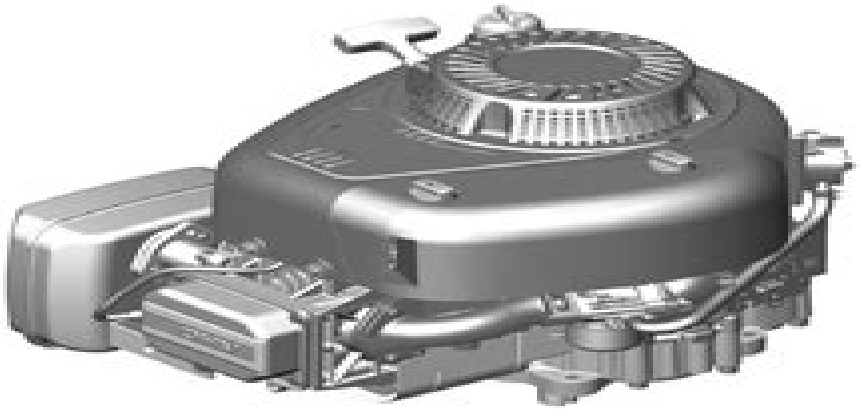

Copyright © Briggs & Stratton Corporation, Milwaukee, WI, USA. All rights reserved. Briggs & Stratton is a registered trademark of Briggs & Stratton Corporation.

Form No. 276344TRI
Revision: T

English
en

Español
es

Français
fr

310000 Service Manual

JR Anderson

310000 Service Manual:

Right here, we have countless books **310000 Service Manual** and collections to check out. We additionally give variant types and next type of the books to browse. The gratifying book, fiction, history, novel, scientific research, as competently as various extra sorts of books are readily affable here.

As this 310000 Service Manual, it ends up living thing one of the favored books 310000 Service Manual collections that we have. This is why you remain in the best website to see the unbelievable book to have.

https://droplet2026.furrfu.com/About/detail/Download_PDFS/b72mark%20scheme%20may.pdf

Table of Contents 310000 Service Manual

1. Understanding the eBook 310000 Service Manual
    - The Rise of Digital Reading 310000 Service Manual
    - Advantages of eBooks Over Traditional Books
2. Identifying 310000 Service Manual
    - Exploring Different Genres
    - Considering Fiction vs. Non-Fiction
    - Determining Your Reading Goals
3. Choosing the Right eBook Platform
    - Popular eBook Platforms
    - Features to Look for in an 310000 Service Manual
    - User-Friendly Interface
4. Exploring eBook Recommendations from 310000 Service Manual
    - Personalized Recommendations
    - 310000 Service Manual User Reviews and Ratings
    - 310000 Service Manual and Bestseller Lists
5. Accessing 310000 Service Manual Free and Paid eBooks
    - 310000 Service Manual Public Domain eBooks

    - 310000 Service Manual eBook Subscription Services
    - 310000 Service Manual Budget-Friendly Options
6. Navigating 310000 Service Manual eBook Formats
    - ePub, PDF, MOBI, and More
    - 310000 Service Manual Compatibility with Devices
    - 310000 Service Manual Enhanced eBook Features
7. Enhancing Your Reading Experience
    - Adjustable Fonts and Text Sizes of 310000 Service Manual
    - Highlighting and Note-Taking 310000 Service Manual
    - Interactive Elements 310000 Service Manual
8. Staying Engaged with 310000 Service Manual
    - Joining Online Reading Communities
    - Participating in Virtual Book Clubs
    - Following Authors and Publishers 310000 Service Manual
9. Balancing eBooks and Physical Books 310000 Service Manual
    - Benefits of a Digital Library
    - Creating a Diverse Reading Collection 310000 Service Manual
10. Overcoming Reading Challenges
    - Dealing with Digital Eye Strain
    - Minimizing Distractions
    - Managing Screen Time
11. Cultivating a Reading Routine 310000 Service Manual
    - Setting Reading Goals 310000 Service Manual
    - Carving Out Dedicated Reading Time
12. Sourcing Reliable Information of 310000 Service Manual
    - Fact-Checking eBook Content of 310000 Service Manual
    - Distinguishing Credible Sources
13. Promoting Lifelong Learning
    - Utilizing eBooks for Skill Development
    - Exploring Educational eBooks

14. Embracing eBook Trends
    - Integration of Multimedia Elements
    - Interactive and Gamified eBooks

310000 Service Manual Introduction

Free PDF Books and Manuals for Download: Unlocking Knowledge at Your Fingertips In todays fast-paced digital age, obtaining valuable knowledge has become easier than ever. Thanks to the internet, a vast array of books and manuals are now available for free download in PDF format. Whether you are a student, professional, or simply an avid reader, this treasure trove of downloadable resources offers a wealth of information, conveniently accessible anytime, anywhere. The advent of online libraries and platforms dedicated to sharing knowledge has revolutionized the way we consume information. No longer confined to physical libraries or bookstores, readers can now access an extensive collection of digital books and manuals with just a few clicks. These resources, available in PDF, Microsoft Word, and PowerPoint formats, cater to a wide range of interests, including literature, technology, science, history, and much more. One notable platform where you can explore and download free 310000 Service Manual PDF books and manuals is the internets largest free library. Hosted online, this catalog compiles a vast assortment of documents, making it a veritable goldmine of knowledge. With its easy-to-use website interface and customizable PDF generator, this platform offers a user-friendly experience, allowing individuals to effortlessly navigate and access the information they seek. The availability of free PDF books and manuals on this platform demonstrates its commitment to democratizing education and empowering individuals with the tools needed to succeed in their chosen fields. It allows anyone, regardless of their background or financial limitations, to expand their horizons and gain insights from experts in various disciplines. One of the most significant advantages of downloading PDF books and manuals lies in their portability. Unlike physical copies, digital books can be stored and carried on a single device, such as a tablet or smartphone, saving valuable space and weight. This convenience makes it possible for readers to have their entire library at their fingertips, whether they are commuting, traveling, or simply enjoying a lazy afternoon at home. Additionally, digital files are easily searchable, enabling readers to locate specific information within seconds. With a few keystrokes, users can search for keywords, topics, or phrases, making research and finding relevant information a breeze. This efficiency saves time and effort, streamlining the learning process and allowing individuals to focus on extracting the information they need. Furthermore, the availability of free PDF books and manuals fosters a culture of continuous learning. By removing financial barriers, more people can access educational resources and pursue lifelong learning, contributing to personal growth and professional development. This democratization of knowledge promotes intellectual curiosity and empowers individuals to become lifelong learners, promoting progress and innovation in various fields. It is worth noting that while

accessing free 310000 Service Manual PDF books and manuals is convenient and cost-effective, it is vital to respect copyright laws and intellectual property rights. Platforms offering free downloads often operate within legal boundaries, ensuring that the materials they provide are either in the public domain or authorized for distribution. By adhering to copyright laws, users can enjoy the benefits of free access to knowledge while supporting the authors and publishers who make these resources available. In conclusion, the availability of 310000 Service Manual free PDF books and manuals for download has revolutionized the way we access and consume knowledge. With just a few clicks, individuals can explore a vast collection of resources across different disciplines, all free of charge. This accessibility empowers individuals to become lifelong learners, contributing to personal growth, professional development, and the advancement of society as a whole. So why not unlock a world of knowledge today? Start exploring the vast sea of free PDF books and manuals waiting to be discovered right at your fingertips.

FAQs About 310000 Service Manual Books

What is a 310000 Service Manual PDF? A PDF (Portable Document Format) is a file format developed by Adobe that preserves the layout and formatting of a document, regardless of the software, hardware, or operating system used to view or print it. **How do I create a 310000 Service Manual PDF?** There are several ways to create a PDF: Use software like Adobe Acrobat, Microsoft Word, or Google Docs, which often have built-in PDF creation tools. Print to PDF: Many applications and operating systems have a "Print to PDF" option that allows you to save a document as a PDF file instead of printing it on paper. Online converters: There are various online tools that can convert different file types to PDF. **How do I edit a 310000 Service Manual PDF?** Editing a PDF can be done with software like Adobe Acrobat, which allows direct editing of text, images, and other elements within the PDF. Some free tools, like PDFescape or Smallpdf, also offer basic editing capabilities. **How do I convert a 310000 Service Manual PDF to another file format?** There are multiple ways to convert a PDF to another format: Use online converters like Smallpdf, Zamzar, or Adobe Acrobats export feature to convert PDFs to formats like Word, Excel, JPEG, etc. Software like Adobe Acrobat, Microsoft Word, or other PDF editors may have options to export or save PDFs in different formats. **How do I password-protect a 310000 Service Manual PDF?** Most PDF editing software allows you to add password protection. In Adobe Acrobat, for instance, you can go to "File" -> "Properties" -> "Security" to set a password to restrict access or editing capabilities. Are there any free alternatives to Adobe Acrobat for working with PDFs? Yes, there are many free alternatives for working with PDFs, such as: LibreOffice: Offers PDF editing features. PDFsam: Allows splitting, merging, and editing PDFs. Foxit Reader: Provides basic PDF viewing and editing capabilities. How do I compress a PDF file? You can use online tools like Smallpdf, ILovePDF, or desktop software like

Adobe Acrobat to compress PDF files without significant quality loss. Compression reduces the file size, making it easier to share and download. Can I fill out forms in a PDF file? Yes, most PDF viewers/editors like Adobe Acrobat, Preview (on Mac), or various online tools allow you to fill out forms in PDF files by selecting text fields and entering information. Are there any restrictions when working with PDFs? Some PDFs might have restrictions set by their creator, such as password protection, editing restrictions, or print restrictions. Breaking these restrictions might require specific software or tools, which may or may not be legal depending on the circumstances and local laws.

Find 310000 Service Manual :

b72mark scheme may
avalon lf manual
awana puggles coloring pages
b1 monday 20th may 2013 mark scheme
avery job ticket holders
avaya 96quick reference guide
ayn rand institute fountainhead essay contest
b14 sentra repair manual
~~aw math 11 trigonometry~~
~~avr beginners guide~~
avr atmega8 development board circuit
~~avancemos3 workbook answers unidad 4~~
awards for students funny
aventures dun gentilhomme breton aux icircles philippines
b k ct1 receivers owners manual

310000 Service Manual :

the civil war diary of freeman colby 1862 a new ha - Apr 28 2022
web web mar 7 2023 the war diary will be published with a new preface by belorusets and new entries that discusses the ongoing war and russian nationalist propaganda and its
the civil war diary of freeman colby 1862 a new ha - Sep 14 2023

web the civil war diary of freeman colby 1862 a new ha history of geauga and lake counties ohio with illustrations and biographical sketches of its pioneers and most

the civil war diary of freeman colby 1862 a new ha - Mar 28 2022

web details the civil war battle of fredericksburg virginia and profiles some of the key figures involved in what was a decisive victory for the confederacy the journal of julia

new hampshire historical society the civil war diary of - Aug 13 2023

web the civil war diary of freeman colby sku 9780982415351 marek bennett presents a comics adaptation of a new hampshire civil war memoir preserved in the collection of

the civil war diary of freeman colby 1862 a new hampshire - Apr 09 2023

web apr 12 2016 marek bennett s comics adaptation of this actual civil war memoir brings to life the dry humor and grim conviction of teacher turned soldier freeman colby fiercely

the civil war diary of freeman colby hardcover google books - Jan 06 2023

web marek bennett s comics adaptation of this actual civil war memoir brings to life the dry humor and grim conviction of teacher turned soldier freeman colby fiercely proud of

the civil war diary of freeman colby 1862 a new ha full pdf - Jan 26 2022

web incorporated with the first maine cavalry the civil war diary of freeman colby hardcover jul 19 2023 marek bennett s comics adaptation of this actual civil war

the civil war diary of freeman colby by bennett marek - Oct 15 2023

web apr 12 2016 the civil war diary of freeman colby 1862 a new hampshire teacher goes to war bennett marek 9780982415351 amazon com books books

the civil war diary of freeman colby goodreads - May 10 2023

web apr 1 2016 41 ratings9 reviews 1862 a new hampshire teacher goes to war marek bennett s comics adaptation of this actual civil war memoir brings to life the dry

the civil war diary of freeman colby hardcover 1862 a new - Jul 12 2023

web mar 21 2019 the civil war diary of freeman colby hardcover 1862 a new hampshire teacher goes to war 1 hardcover march 21 2019 by marek bennett

the civil war diary of freeman colby 1862 a new ha ruben - Jun 30 2022

web the civil war diary of freeman colby 1862 a new ha this is likewise one of the factors by obtaining the soft documents of this the civil war diary of freeman colby 1862 a

the civil war diary of freeman colby 1862 a new ha copy - Dec 25 2021

web diaries and journals of the american civil war the civil war diary of freeman colby by marek bennett the civil war diary of freeman colby 1862 a new ha downloaded

the civil war diary of freeman colby 1862 a new ha full pdf - Nov 23 2021

web the civil war diary of freeman colby 1862 a new ha cobalt deficiency in new hampshire cattle sheep and goats jun 26 2022 includes its reports jacksonian

the civil war diary of freeman colby 1862 a new ha - Nov 04 2022

web they will test the strength and courage of not only corinna and colby but the entire freeman family the civil war diary of freeman colby volume 2 oct 06 2023 the

the civil war diary of freeman colby 1862 a new ha pdf - Jun 11 2023

web the civil war diary of freeman colby 1862 a new ha i acted from principle oct 11 2022 at the start of the civil war dr william mcpheeters was a distinguished physician

the civil war diary of freeman colby 1862 a new ha pdf copy - May 30 2022

web the civil war diary of freeman colby 1862 a new ha pdf introduction the civil war diary of freeman colby 1862 a new ha pdf copy title the civil war diary of

the civil war diary of freeman colby 1862 a new hampshire - Dec 05 2022

web the civil war diary of freeman colby 1862 a new hampshire teacher goes to war by marek bennett growing up in new the civil war diary of freeman colby vol 2 non

the civil war diary of freeman colby 1862 a new ha pdf ftp - Feb 24 2022

web this the civil war diary of freeman colby 1862 a new ha as one of the most practicing sellers here will entirely be in the midst of the best options to review the civil war

the civil war diary of freeman colby 1862 open library - Mar 08 2023

web apr 12 2016 the civil war diary of freeman colby 1862 a new hampshire teacher goes to war 0 ratings 1 want to read 0 currently reading 0 have read

browse editions for the civil war diary of freeman colby - Oct 03 2022

web the civil war diary of freeman colby hardcover 1862 a new hampshire teacher goes to war marek bennett

the civil war diary of freeman colby 1862 a new hampshire - Feb 07 2023

web the civil war diary of freeman colby 1862 a new hampshire teacher goes to war bennett marek amazon com au books

the civil war diary of freeman colby vol 1 1861 62 - Sep 02 2022

web mar 10 2016 description 1862 a new hampshire teacher goes to war marek bennett s comics adaptation of this actual civil war memoir brings to life the dry

civil war diary of freeman colby 1861 1863 live free and draw - Aug 01 2022
web civil war diary of freeman colby 1861 1863 a nh teacher goes to war comics adaptation of a henniker native s written account freeman colby enlisted in the ma
reihe liederbuch grundschule schott music - Jul 13 2023
web liederbuch grundschule mit über 250 liedern aus allen bereichen setzt das liederbuch grundschule neue maßstäbe für den unterricht in der grundschule ein stattliches
liederbücher grundschule pädagogik schott music - Feb 08 2023
web beschreibung umfassend mit über 250 liedern aus allen bereichen setzt dieses buch neue maßstäbe für den unterricht in der grundschule ein stattliches audio paket mit
mein liederbuch schulbuch cornelsen - Oct 24 2021

liederbuch musikbuch kinderlieder online kaufen mytoys - Nov 24 2021
web mein liederbuch präsentiert sich mit 250 liedern in 15 kapiteln einem humorvollen gesamtbild und besonderen schwerpunkten wie lieder rund um die schuleinführung
liederbuch grundschule lehrer cd box amazon de - Sep 03 2022
web ob liederbücher für die schule für hochbetagte mit demenz zur weihnachtszeit oder unsere feten und schlagerbücher für geselliges beisammensein hier findet jeder was
liederbuch grundschule hardcover reihe liederbuch - May 11 2023
web liederbuch grundschule hardcover bestellnummer ed 21864 20 ausgabe liederbuch reihe liederbuch grundschule 24 50 inkl mwst zzgl versandkosten
liederbuch grundschule schott music - Apr 10 2023
web liederbuch grundschule hardcover liederbuch finden sie alle bücher von frigga schnelle bei der büchersuchmaschine eurobuch com können sie antiquarische und
liederbücher bücher schott music - Aug 02 2022
web das liederbuch für die grundschule enthält moderne lieder und klassiker für klasse 1 bis 4 Über 100 lieder wecken und fördern bei schülerinnen und schülern die freude am
liederbuch grundschule broschiert liederbuch musiknoten - May 31 2022
web liederbuch grundschule hardcover liederbuch frigga schnelle herausgeber notenblätter 288 seiten 2014 1 auflage schott music 978 3 7957 4863 0 isbn 24
liederbuch grundschule hardcover liederbuch - Oct 04 2022

web audio kassette 59 67 2 gebraucht ab 59 67 19 neu ab 57 28 umfassend mit über 250 liedern aus allen bereichen setzt dieses buch neue maßstäbe für den unterricht in

9783795748630 liederbuch grundschule hardcover - Mar 09 2023

web 113 alte und neue kinderlieder für die kita und zuhause leicht arrangiert für gesang und gitarre

liederbuch grundschule hardcover liederbuch - Sep 15 2023

web liederbuch grundschule hardcover liederbuch schnelle frigga amazon com tr kitap

liederbuch grundschule bayern schott music com - Mar 29 2022

web liederbuch grundschule bücher gebraucht antiquarisch neu kaufen preisvergleich käuferschutz wir bücher bücher hörbücher filme musik liederbuch

liederbuch grundschule buch gebraucht antiquarisch neu - Feb 25 2022

web liederbuch grundschule hardcover songbücher verlag schott musik bestellnummer ed21864 20 schnelle lieferung jetzt bestellen

mein liederbuch liederbuch für die grundschule hardcover - Dec 26 2021

web ratgeber für eltern 597 kinderzimmer wohnen 23110 schule lernen 30880 sport garten 17592 liederbuch musikbuch kinderlieder große auswahl online kaufen

schul liederbücher für die grundschule - Jun 12 2023

web hardcover reihe liederbuch grundschule von frigga schnelle martin bernhard verlag schott music liederbuch 1 auflage erschienen 2014 288 s hardcover

liederbuch grundschule hardcover noten online kaufen - Jan 27 2022

web mein liederbuch liederbuch für die grundschule isbn 10 3061501126 isbn 13 9783061501129 volk u wissen vlg gmbh 2002 hardcover

suchergebnis auf amazon de für liederbuch schule - Nov 05 2022

web liederbuch grundschule hardcover liederbuch on amazon com au free shipping on eligible orders liederbuch grundschule hardcover liederbuch

rondo das liederbuch für die grundschule amazon de - Jul 01 2022

web liederbuch grundschule broschiert liederbuch schnelle frigga bernhard martin amazon de bücher

liederbuch grundschule hardcover liederbuch musiknoten - Aug 14 2023

web liederbuch grundschule hardcover liederbuch musiknoten 31 märz 2014 von frigga schnelle herausgeber martin bernhard illustrator 4 7 19 sternebewertungen

liederbuch grundschule lehrerband schott music - Dec 06 2022

web liederbuch für die schule liederbuch schulbuch liederbuch für die schule für das 5 bis 13 schuljahr Östliche bundesländer und berlin bisherige ausgabe von manfred

liederbuch grundschule von frigga schnelle lehmanns de - Apr 29 2022

web beschreibung umfassend mit über 250 liedern aus allen bereichen setzt dieses buch neue maßstäbe für den unterricht in der grundschule ein stattliches audio paket mit

liederbuch grundschule schott music - Jan 07 2023

web liederbuch grundschule lehrerband handreichungen und arbeitsblätter bestellnummer ed 21898d ausgabe lehrerband pdf cd reihe liederbuch grundschule 28 50

headwaypreintermediateworkbookunit12ans wers - Feb 24 2022

web headway pre intermediate workbook unit 12 answers yeah reviewing a book headway pre intermediate workbook unit 12 answers could amass your close connections

headway pre intermediate fourth edition answer key answers - Aug 01 2022

web feb 16 2021 headway pre intermediate workbook 5th edition pdf every scholar s guide comprises 14 thematic blocks with a well known progress construction and built in

audio and video downloads headway student s site oxford - Jul 12 2023

web unit 6 zip 52mb unit 7 zip 70mb unit 8 zip 65mb unit 9 zip 57mb unit 10 zip 68mb unit 11 zip 64mb unit 12 zip 73mb copyright oxford university press

pre intermediate fourth edition headway student s site oxford - Aug 13 2023

web nov 7 2023 headway student s site pre intermediate fourth edition grammar vocabulary everyday english audio and video downloads test builder

headway pre intermediate workbook 5th edition langpath - Jun 30 2022

web headway pre intermediate workbook unit 12 answers straightforward jul 18 2022 ideal for teachers looking for an easy to use adult general english course

unit 12 headway student s site oxford university press - Feb 07 2023

web headway 5th edition provides fresh relevant english instruction needed for success today headway and its award winning authors liz and john soars are names that have

new headway pre intermediate workbook with key - Apr 09 2023

web part of new headway language level pre intermediate a2 b1 headway s trusted methodology combines solid grammar and practice vocabulary development and

headway pre intermediate workbook unit 12 answers - May 30 2022

web language in use pre intermediate self study workbook answer key oct 02 2020 a popular and highly acclaimed four level course which both interests and stretches

new headway pre intermediate fourth edition adults young - Mar 08 2023

web students headway student s site intermediate fourth edition grammar unit 12

headway pre intermediate workbook answers key 5th edition - Oct 15 2023

web dec 13 2021 headway pre intermediate workbook answers key 5th edition 2019 was published by ketilayn oye on 2021 12 13 find more similar flip pdfs like headway

exercise 1 12 vocabulary new headway pre intermediate - Jun 11 2023

web the key answer of exercise 1 the key to exercise solutions in chapter 12 vocabulary for the textbook new headway pre intermediate workbook with authors liz soars john

new headway intermediate teacher s book pdf scribd - Oct 03 2022

web of 2 headway name class new word list unit 12 pre intermediate fourth edition here is a list of most of the adj adjective n noun pron pronoun new words in unit

exercise 1 stop and check units 9 12 new headway pre - May 10 2023

web the key answer of exercise 1 the key to exercise solutions in chapter stop and check units 9 12 for the textbook new headway pre intermediate workbook with authors

headway pre intermediate workbook unit 12 answers copy - Apr 28 2022

web headway pre intermediate workbook unit 12 answers complete pet student s book pack student s book with answers with cd rom and audio cds 2 oct 31 2020

headway pre intermediate workbook unit 12 answers book - Mar 28 2022

web intermediate dec 02 2021 new interactive editions of the best selling course for adult professional learners new headway pre intermediate sep 23 2023 the world s best

headway pre intermediate oxford university press - Jan 06 2023

web headway pre intermediate workbook unit 12 answers portada biblioteca ulpgc may 13th 2018 el catálogo es de acceso público y permite localizar los fondos de la

headway pre intermediate workbook unit 12 answers clive - Jan 26 2022

headway pre intermediate workbook unit 12 answers - Dec 05 2022

web the key answer of exercise 12 the key to exercise solutions in chapter 8 grammar for the textbook new headway pre intermediate workbook with authors liz soars john

headway pre intermediate students book workbook - Sep 14 2023
web pre intermediate students book workbook teacher s guide 5th ed 5 th edition oxford university press 2019 sb 1 60p wb 93p tg 240p updated with new
word list unit 12 pre intermediate pdf planetary science - Sep 02 2022
web new headway pre intermediate 4th ed workbook with answer key headway pre intermediate fourth edition remains true to its trusted methodology that has worked for
exercise 12 8 grammar new headway pre intermediate - Nov 04 2022
web new headway intermediate teacher s book free ebook download as pdf file pdf or read book online for free