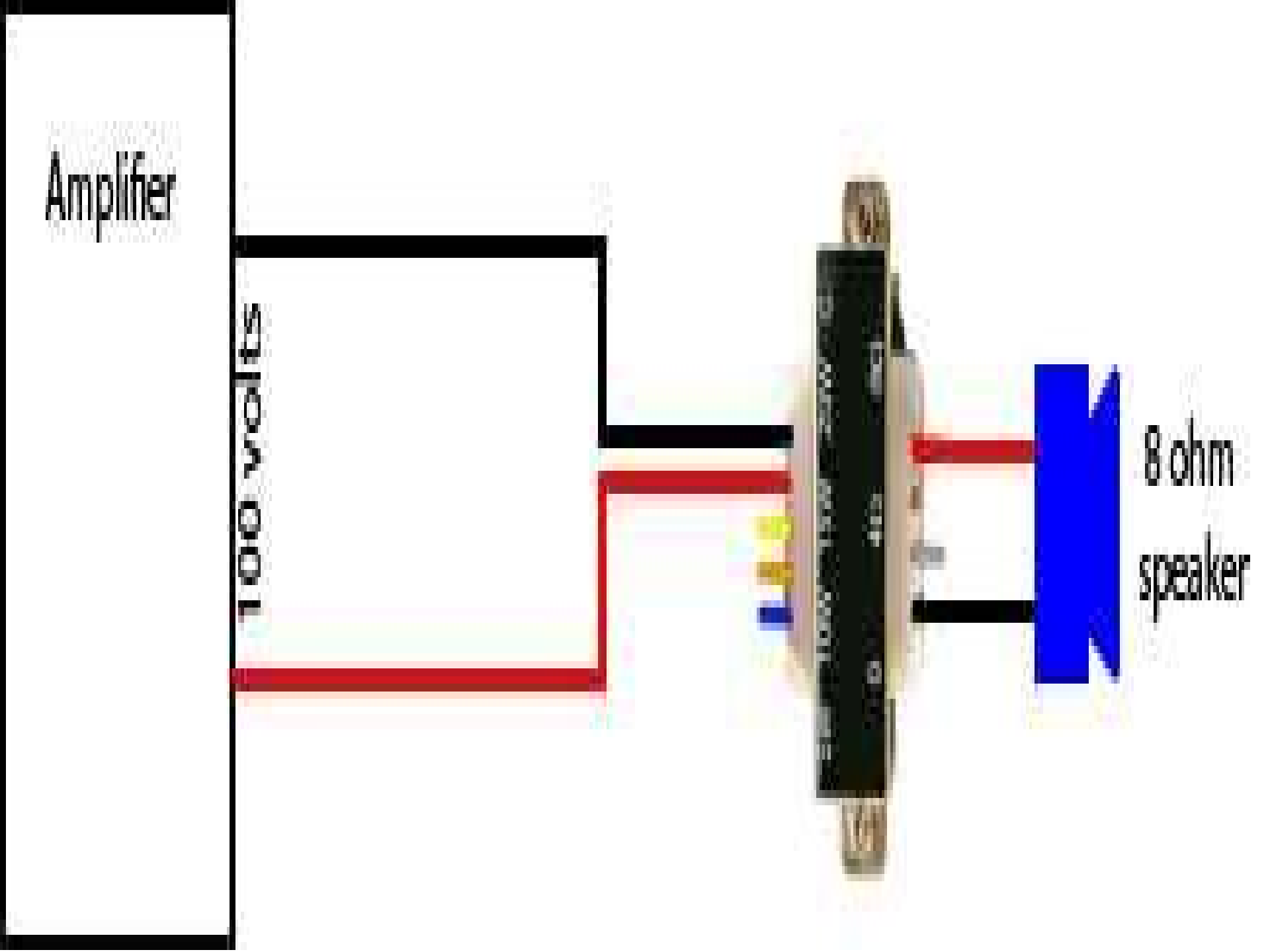
Amplifier
100 volts
8 ohm
speaker

70 Volt Speaker Wiring

AW Chickering

70 Volt Speaker Wiring:

Yeah, reviewing a books **70 Volt Speaker Wiring** could grow your near connections listings. This is just one of the solutions for you to be successful. As understood, realization does not recommend that you have astonishing points.

Comprehending as skillfully as promise even more than supplementary will have the funds for each success. adjacent to, the message as well as perception of this 70 Volt Speaker Wiring can be taken as without difficulty as picked to act.

https://droplet2026.furrfu.com/About/uploaded-files/fetch.php/onity%20edht22i%20locks%20manual.pdf

Table of Contents 70 Volt Speaker Wiring

1. Understanding the eBook 70 Volt Speaker Wiring
    - The Rise of Digital Reading 70 Volt Speaker Wiring
    - Advantages of eBooks Over Traditional Books
2. Identifying 70 Volt Speaker Wiring
    - Exploring Different Genres
    - Considering Fiction vs. Non-Fiction
    - Determining Your Reading Goals
3. Choosing the Right eBook Platform
    - Popular eBook Platforms
    - Features to Look for in an 70 Volt Speaker Wiring
    - User-Friendly Interface
4. Exploring eBook Recommendations from 70 Volt Speaker Wiring
    - Personalized Recommendations
    - 70 Volt Speaker Wiring User Reviews and Ratings
    - 70 Volt Speaker Wiring and Bestseller Lists
5. Accessing 70 Volt Speaker Wiring Free and Paid eBooks
    - 70 Volt Speaker Wiring Public Domain eBooks
    - 70 Volt Speaker Wiring eBook Subscription Services

    - 70 Volt Speaker Wiring Budget-Friendly Options
6. Navigating 70 Volt Speaker Wiring eBook Formats
    - ePub, PDF, MOBI, and More
    - 70 Volt Speaker Wiring Compatibility with Devices
    - 70 Volt Speaker Wiring Enhanced eBook Features
7. Enhancing Your Reading Experience
    - Adjustable Fonts and Text Sizes of 70 Volt Speaker Wiring
    - Highlighting and Note-Taking 70 Volt Speaker Wiring
    - Interactive Elements 70 Volt Speaker Wiring
8. Staying Engaged with 70 Volt Speaker Wiring
    - Joining Online Reading Communities
    - Participating in Virtual Book Clubs
    - Following Authors and Publishers 70 Volt Speaker Wiring
9. Balancing eBooks and Physical Books 70 Volt Speaker Wiring
    - Benefits of a Digital Library
    - Creating a Diverse Reading Collection 70 Volt Speaker Wiring
10. Overcoming Reading Challenges
    - Dealing with Digital Eye Strain
    - Minimizing Distractions
    - Managing Screen Time
11. Cultivating a Reading Routine 70 Volt Speaker Wiring
    - Setting Reading Goals 70 Volt Speaker Wiring
    - Carving Out Dedicated Reading Time
12. Sourcing Reliable Information of 70 Volt Speaker Wiring
    - Fact-Checking eBook Content of 70 Volt Speaker Wiring
    - Distinguishing Credible Sources
13. Promoting Lifelong Learning
    - Utilizing eBooks for Skill Development
    - Exploring Educational eBooks
14. Embracing eBook Trends

- Integration of Multimedia Elements
- Interactive and Gamified eBooks

70 Volt Speaker Wiring Introduction

70 Volt Speaker Wiring Offers over 60,000 free eBooks, including many classics that are in the public domain. Open Library: Provides access to over 1 million free eBooks, including classic literature and contemporary works. 70 Volt Speaker Wiring Offers a vast collection of books, some of which are available for free as PDF downloads, particularly older books in the public domain. 70 Volt Speaker Wiring : This website hosts a vast collection of scientific articles, books, and textbooks. While it operates in a legal gray area due to copyright issues, its a popular resource for finding various publications. Internet Archive for 70 Volt Speaker Wiring : Has an extensive collection of digital content, including books, articles, videos, and more. It has a massive library of free downloadable books. Free-eBooks 70 Volt Speaker Wiring Offers a diverse range of free eBooks across various genres. 70 Volt Speaker Wiring Focuses mainly on educational books, textbooks, and business books. It offers free PDF downloads for educational purposes. 70 Volt Speaker Wiring Provides a large selection of free eBooks in different genres, which are available for download in various formats, including PDF. Finding specific 70 Volt Speaker Wiring, especially related to 70 Volt Speaker Wiring, might be challenging as theyre often artistic creations rather than practical blueprints. However, you can explore the following steps to search for or create your own Online Searches: Look for websites, forums, or blogs dedicated to 70 Volt Speaker Wiring, Sometimes enthusiasts share their designs or concepts in PDF format. Books and Magazines Some 70 Volt Speaker Wiring books or magazines might include. Look for these in online stores or libraries. Remember that while 70 Volt Speaker Wiring, sharing copyrighted material without permission is not legal. Always ensure youre either creating your own or obtaining them from legitimate sources that allow sharing and downloading. Library Check if your local library offers eBook lending services. Many libraries have digital catalogs where you can borrow 70 Volt Speaker Wiring eBooks for free, including popular titles.Online Retailers: Websites like Amazon, Google Books, or Apple Books often sell eBooks. Sometimes, authors or publishers offer promotions or free periods for certain books.Authors Website Occasionally, authors provide excerpts or short stories for free on their websites. While this might not be the 70 Volt Speaker Wiring full book , it can give you a taste of the authors writing style.Subscription Services Platforms like Kindle Unlimited or Scribd offer subscription-based access to a wide range of 70 Volt Speaker Wiring eBooks, including some popular titles.

FAQs About 70 Volt Speaker Wiring Books

What is a 70 Volt Speaker Wiring PDF? A PDF (Portable Document Format) is a file format developed by Adobe that preserves the layout and formatting of a document, regardless of the software, hardware, or operating system used to view or print it. **How do I create a 70 Volt Speaker Wiring PDF?** There are several ways to create a PDF: Use software like Adobe Acrobat, Microsoft Word, or Google Docs, which often have built-in PDF creation tools. Print to PDF: Many applications and operating systems have a "Print to PDF" option that allows you to save a document as a PDF file instead of printing it on paper. Online converters: There are various online tools that can convert different file types to PDF. **How do I edit a 70 Volt Speaker Wiring PDF?** Editing a PDF can be done with software like Adobe Acrobat, which allows direct editing of text, images, and other elements within the PDF. Some free tools, like PDFescape or Smallpdf, also offer basic editing capabilities. **How do I convert a 70 Volt Speaker Wiring PDF to another file format?** There are multiple ways to convert a PDF to another format: Use online converters like Smallpdf, Zamzar, or Adobe Acrobats export feature to convert PDFs to formats like Word, Excel, JPEG, etc. Software like Adobe Acrobat, Microsoft Word, or other PDF editors may have options to export or save PDFs in different formats. **How do I password-protect a 70 Volt Speaker Wiring PDF?** Most PDF editing software allows you to add password protection. In Adobe Acrobat, for instance, you can go to "File" -> "Properties" -> "Security" to set a password to restrict access or editing capabilities. Are there any free alternatives to Adobe Acrobat for working with PDFs? Yes, there are many free alternatives for working with PDFs, such as: LibreOffice: Offers PDF editing features. PDFsam: Allows splitting, merging, and editing PDFs. Foxit Reader: Provides basic PDF viewing and editing capabilities. How do I compress a PDF file? You can use online tools like Smallpdf, ILovePDF, or desktop software like Adobe Acrobat to compress PDF files without significant quality loss. Compression reduces the file size, making it easier to share and download. Can I fill out forms in a PDF file? Yes, most PDF viewers/editors like Adobe Acrobat, Preview (on Mac), or various online tools allow you to fill out forms in PDF files by selecting text fields and entering information. Are there any restrictions when working with PDFs? Some PDFs might have restrictions set by their creator, such as password protection, editing restrictions, or print restrictions. Breaking these restrictions might require specific software or tools, which may or may not be legal depending on the circumstances and local laws.

Find 70 Volt Speaker Wiring :

onity edht22i locks manual
interesting women stories
question paper 2 mathematics grade 1nov december

manual boeing 737ng
business studies september 2014 memo kzn
manual alcatel tribe 3041g
here come the bride the bridesmaids proposal the billionaires blind date
saturn sc2 service manual driver side door
zenith z50pj240 owners manual
4024 mathematics syllabus d papers xtremepapers
firm value and optimal levels of liquidity
read new era accounting grade 11 learners solution
read new era accounting grade 1learners solution
bmw alternator repair cost
peugeot 405 service repair workshop manual 1991 1996

70 Volt Speaker Wiring :

Collections Close Reader: Grade 11 - 1st Edition Our resource for Collections Close Reader: Grade 11 includes answers to chapter exercises, as well as detailed information to walk you through the process step ... Collections: Grade 11 - 1st Edition - Solutions and Answers Find step-by-step solutions and answers to Collections: Grade 11 - 9780544569546, as well as thousands of textbooks so you can move forward with confidence. Collections Close Reader Grade 11 Teacher Edition Active and engaged learning with a blended digital and print approach · Balance of complex texts with collections of fiction, nonfiction, and informational ... Collections Close Reader Student Edition Grade 11 Collections Close Reader Student Edition Grade 11 ; Format: Softcover, 160 Pages ; ISBN-13/EAN: 9780544091191 ; ISBN-10: 0544091191 ; Product Code: 1538262 ... Close Reader Student Edition Grade 11 (Collections) Lowest Pricein this set of products ; This item: Close Reader Student Edition Grade 11 (Collections). Holt Mcdougal. 4.6 out of 5 stars 34. Paperback. $7.37$7.37. Close Reader Grade 11 Close Reader Grade 11. Answers To Journeys Readers Notebook Grade 4 - YUMPU. Only 11 left in stock - order soon. Close Reader Answers Read Book Houghton Mifflin Harcourt Close Reader Answer Key Collections Close Reader ... Collections Close Reader Grade 11 Answers is additionally useful. What ... Collections Close Reader Grade 10 Answers Collections Close Reader Grade 10 Answers. Collections Close Reader Grade 10 AnswersThe Accelerated Reading program offers students reading programs based ... Resources in Education Living on the ragged edge: Bible study guide Living on the ragged edge: Bible study guide [Swindoll, Charles R] on Amazon ... Insight for Living (January 1, 1984). Language, English. Paperback, 95 pages. Living on the Ragged Edge: Coming to Terms with Reality Bible Companions & Study Guides/Living on the Ragged

Edge: Coming to Terms with Reality ... Insights on the Bible · Article Library · Daily Devotional · Videos. Living on the Ragged Edge: Finding Joy in a World Gone ... Regardless of how we fill in the blank. Chuck Swindoll examines King Solomon's vain quest for satisfaction, recorded in the book of Ecclesiastes. In this ... Living on the Ragged Edge Living on the Ragged Edge. Chuck Swindoll sits down with Johnny Koons to discuss key life lessons related to Chuck's classic Living on the Ragged Edge series. Living on the Ragged Edge (Insight for Living Bible Study ... Living on the Ragged Edge (Insight for Living Bible Study Guides) by Charles R. Swindoll - ISBN 10: 084998212X - ISBN 13: 9780849982125 - W Publishing Group ... Living on the Ragged Edge: Swindoll, Charles R. - Books The ultimate secret for "the good life." In the never-ending quest for fulfillment, we sometimes convince ourselves that life would be better if we just had ... Living on the Ragged Edge - Quotable Living on the Ragged Edge is a study of the book of Ecclesiastes, and it's for folks who live in the trenches — down there where it's dark and dirty and ... STS Studies and Message Mates Guide you through the biblical text of the current broadcast · Show you how to glean profound truths from God's Word · Help you understand, apply, and communicate ... Living on the ragged edge: Bible study guide... Living on the ragged edge: Bible study guide... by Charles R Swindoll. $7.39 ... Publisher:Insight for Living. Length:95 Pages. Weight:1.45 lbs. You Might Also ... Living on the Ragged Edge, PDF Bible companion Living on the Ragged Edge, digital classic series. $31.00. Old Testament Characters, study guide. In Defense of Secular Humanism by Kurtz, Paul In Defense of Secular Humanism is a collection of essays written by Paul Kurtz, mostly in reaction to allegations leveled against secular humanism (and humanism ... In Defense of Secular Humanism - Oxford Academic Abstract. Chapter concludes that theism is neither indispensable for the delineation of moral imperatives, nor motivationally necessary to assure adherence ... In Defense of Secular Humanism In Defense of Secular Humanism is a collection of essays written by Paul Kurtz, mostly in reaction to allegations leveled against secular humanism (and humanism ... In Defense of Secular Humanism - 9780879752286 It is a closely reasoned defense of one of the most venerable ethical, scientific and philosophical traditions within Western civilization. Details. Details. In Defense of Secular Humanism - Kurtz, Paul In Defense of Secular Humanism by Kurtz, Paul - ISBN 10: 0879752211 - ISBN 13: 9780879752217 - Prometheus Books - 1983 - Hardcover. In Defense of Secular Humanism book by Paul Kurtz "In Defense of Secular Humanism" by Paul Kurtz. Great introduction to this topic from one of its earliest and most staunch proponents. Because I'm a slow ... In Defense of Secular Humanism - Paul Kurtz A collection of essays by Paul Kurtz that offer a closely reasoned defense of secular humanism, arguing that ultraconservatives are not simply attacking ... Yale lectures offer defense of secular humanism | YaleNews Mar 8, 2013 — In “Mortality and Meaning,” Kitcher will argue that a worthwhile life is attainable without religion's promise of an afterlife or posthumous ... In defense of secular humanism A collection of essays by Paul Kurtz that offer a closely reasoned defense of secular humanism, arguing that ultraconservatives are not simply attacking ... In Defense of Secular Humanism This talk is based on Paul Kurtz's book, In Defense of. Secular Humanism (Prometheus Books, New York 1983). While the book is not

new, I believe it is one ...