U FUSE AND CONNECTORS

U01 to 14

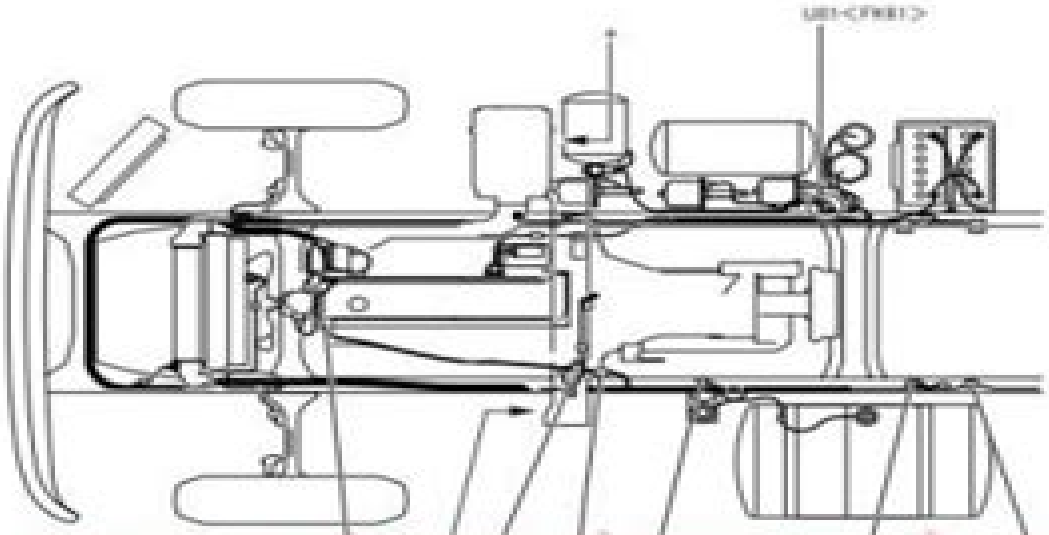

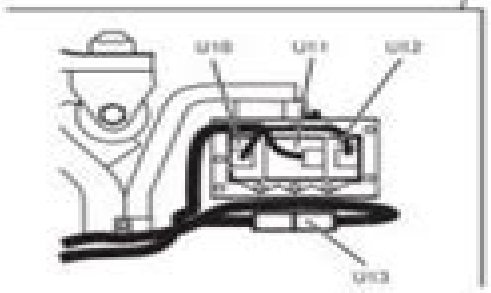

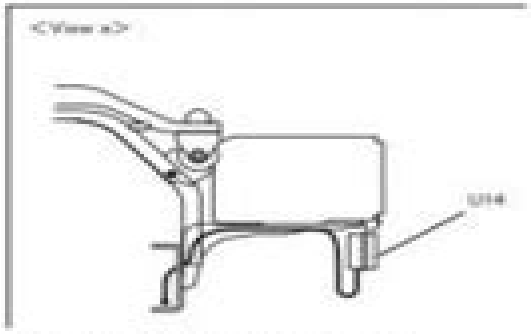

U01 Connection of chassis harness and anti-lock brake system control harness
U02 Connection of chassis harness and rear chassis harness
U03 Van body dome light connector
U04 Spare tail lamp connector
U05 Transmission power take-off control switch connector
U06 Connection of chassis harness and engine harness
U07 Transmission power take-off load sensor connector
U08 Connection of engine harness and injector harness
U10 EGR EDU 3
U11 Throttle EDU
U12 EGR EDU 1
U13 Connection of engine harness and engine control harness
U14 High-current fuse box

EDU : Electronic drive unit
EGR : Exhaust gas recirculation

www.autorepairmanuals.ws

4m51 Service Manual

Victor M. Corman

4m51 Service Manual:

Thank you very much for downloading **4m51 Service Manual**. As you may know, people have search hundreds times for their chosen readings like this 4m51 Service Manual, but end up in infectious downloads.
Rather than enjoying a good book with a cup of coffee in the afternoon, instead they juggled with some malicious virus inside their computer.

4m51 Service Manual is available in our digital library an online access to it is set as public so you can download it instantly.
Our digital library saves in multiple locations, allowing you to get the most less latency time to download any of our books like this one.
Kindly say, the 4m51 Service Manual is universally compatible with any devices to read

https://droplet2026.furrfu.com/public/Resources/HomePages/chrysler_voyager_2005_workshop_service_manual_repair.pdf

Table of Contents 4m51 Service Manual

1. Understanding the eBook 4m51 Service Manual
    - The Rise of Digital Reading 4m51 Service Manual
    - Advantages of eBooks Over Traditional Books
2. Identifying 4m51 Service Manual
    - Exploring Different Genres
    - Considering Fiction vs. Non-Fiction
    - Determining Your Reading Goals
3. Choosing the Right eBook Platform
    - Popular eBook Platforms
    - Features to Look for in an 4m51 Service Manual
    - User-Friendly Interface
4. Exploring eBook Recommendations from 4m51 Service Manual
    - Personalized Recommendations
    - 4m51 Service Manual User Reviews and Ratings

    - 4m51 Service Manual and Bestseller Lists
5. Accessing 4m51 Service Manual Free and Paid eBooks
    - 4m51 Service Manual Public Domain eBooks
    - 4m51 Service Manual eBook Subscription Services
    - 4m51 Service Manual Budget-Friendly Options
6. Navigating 4m51 Service Manual eBook Formats
    - ePub, PDF, MOBI, and More
    - 4m51 Service Manual Compatibility with Devices
    - 4m51 Service Manual Enhanced eBook Features
7. Enhancing Your Reading Experience
    - Adjustable Fonts and Text Sizes of 4m51 Service Manual
    - Highlighting and Note-Taking 4m51 Service Manual
    - Interactive Elements 4m51 Service Manual
8. Staying Engaged with 4m51 Service Manual
    - Joining Online Reading Communities
    - Participating in Virtual Book Clubs
    - Following Authors and Publishers 4m51 Service Manual
9. Balancing eBooks and Physical Books 4m51 Service Manual
    - Benefits of a Digital Library
    - Creating a Diverse Reading Collection 4m51 Service Manual
10. Overcoming Reading Challenges
    - Dealing with Digital Eye Strain
    - Minimizing Distractions
    - Managing Screen Time
11. Cultivating a Reading Routine 4m51 Service Manual
    - Setting Reading Goals 4m51 Service Manual
    - Carving Out Dedicated Reading Time
12. Sourcing Reliable Information of 4m51 Service Manual
    - Fact-Checking eBook Content of 4m51 Service Manual
    - Distinguishing Credible Sources

13. Promoting Lifelong Learning
    - Utilizing eBooks for Skill Development
    - Exploring Educational eBooks
14. Embracing eBook Trends
    - Integration of Multimedia Elements
    - Interactive and Gamified eBooks

4m51 Service Manual Introduction

In the digital age, access to information has become easier than ever before. The ability to download 4m51 Service Manual has revolutionized the way we consume written content. Whether you are a student looking for course material, an avid reader searching for your next favorite book, or a professional seeking research papers, the option to download 4m51 Service Manual has opened up a world of possibilities. Downloading 4m51 Service Manual provides numerous advantages over physical copies of books and documents. Firstly, it is incredibly convenient. Gone are the days of carrying around heavy textbooks or bulky folders filled with papers. With the click of a button, you can gain immediate access to valuable resources on any device. This convenience allows for efficient studying, researching, and reading on the go. Moreover, the cost-effective nature of downloading 4m51 Service Manual has democratized knowledge. Traditional books and academic journals can be expensive, making it difficult for individuals with limited financial resources to access information. By offering free PDF downloads, publishers and authors are enabling a wider audience to benefit from their work. This inclusivity promotes equal opportunities for learning and personal growth. There are numerous websites and platforms where individuals can download 4m51 Service Manual. These websites range from academic databases offering research papers and journals to online libraries with an expansive collection of books from various genres. Many authors and publishers also upload their work to specific websites, granting readers access to their content without any charge. These platforms not only provide access to existing literature but also serve as an excellent platform for undiscovered authors to share their work with the world. However, it is essential to be cautious while downloading 4m51 Service Manual. Some websites may offer pirated or illegally obtained copies of copyrighted material. Engaging in such activities not only violates copyright laws but also undermines the efforts of authors, publishers, and researchers. To ensure ethical downloading, it is advisable to utilize reputable websites that prioritize the legal distribution of content. When downloading 4m51 Service Manual, users should also consider the potential security risks associated with online platforms. Malicious actors may exploit vulnerabilities in unprotected websites to distribute malware or steal personal information. To protect themselves, individuals should ensure their devices have reliable antivirus software installed and validate the legitimacy of the websites they are downloading from.

In conclusion, the ability to download 4m51 Service Manual has transformed the way we access information. With the convenience, cost-effectiveness, and accessibility it offers, free PDF downloads have become a popular choice for students, researchers, and book lovers worldwide. However, it is crucial to engage in ethical downloading practices and prioritize personal security when utilizing online platforms. By doing so, individuals can make the most of the vast array of free PDF resources available and embark on a journey of continuous learning and intellectual growth.

FAQs About 4m51 Service Manual Books

What is a 4m51 Service Manual PDF? A PDF (Portable Document Format) is a file format developed by Adobe that preserves the layout and formatting of a document, regardless of the software, hardware, or operating system used to view or print it. **How do I create a 4m51 Service Manual PDF?** There are several ways to create a PDF: Use software like Adobe Acrobat, Microsoft Word, or Google Docs, which often have built-in PDF creation tools. Print to PDF: Many applications and operating systems have a "Print to PDF" option that allows you to save a document as a PDF file instead of printing it on paper. Online converters: There are various online tools that can convert different file types to PDF. **How do I edit a 4m51 Service Manual PDF?** Editing a PDF can be done with software like Adobe Acrobat, which allows direct editing of text, images, and other elements within the PDF. Some free tools, like PDFescape or Smallpdf, also offer basic editing capabilities. **How do I convert a 4m51 Service Manual PDF to another file format?** There are multiple ways to convert a PDF to another format: Use online converters like Smallpdf, Zamzar, or Adobe Acrobats export feature to convert PDFs to formats like Word, Excel, JPEG, etc. Software like Adobe Acrobat, Microsoft Word, or other PDF editors may have options to export or save PDFs in different formats. **How do I password-protect a 4m51 Service Manual PDF?** Most PDF editing software allows you to add password protection. In Adobe Acrobat, for instance, you can go to "File" -> "Properties" -> "Security" to set a password to restrict access or editing capabilities. Are there any free alternatives to Adobe Acrobat for working with PDFs? Yes, there are many free alternatives for working with PDFs, such as: LibreOffice: Offers PDF editing features. PDFsam: Allows splitting, merging, and editing PDFs. Foxit Reader: Provides basic PDF viewing and editing capabilities. How do I compress a PDF file? You can use online tools like Smallpdf, ILovePDF, or desktop software like Adobe Acrobat to compress PDF files without significant quality loss. Compression reduces the file size, making it easier to share and download. Can I fill out forms in a PDF file? Yes, most PDF viewers/editors like Adobe Acrobat, Preview (on Mac), or various online tools allow you to fill out forms in PDF files by selecting text fields and entering information. Are there any restrictions when working with PDFs? Some PDFs might have restrictions set by their creator, such as password protection, editing restrictions, or print restrictions. Breaking these restrictions might require specific software or tools, which may or

may not be legal depending on the circumstances and local laws.

Find 4m51 Service Manual :

chrysler voyager 2005 workshop service manual repair
chs entrance exam question paper 2013
church board member resignation letter
chs entrance model paper
chroniques de galadria vi espoir
christian science monitor app
chrysler cooling fan wire diagram
chrysler sebring 2002 repair service manual
chrysler voyager 2001 2002 service repair workshop manual
christmas with the alexanders the alexanders book english edition
christmas carol study guide
~~chroniques solutions enfants tproblegravemes de comportement~~
chrysler laser talon 1990 1991 full service repair manual
~~chrysler sebring repair manual mod 97~~
christmas eve at friday harbor

4m51 Service Manual :

how to configure ospf in packet tracer sysnettech solutions - Oct 17 2023
web jan 15 2020 to configure the ospf protocol follow the steps below open packet tracer and create the topology as shown in the image below also add comments to the workspace by defining ip address blocks assigning ip addresses to computers open the cisco router r1 cli command prompt and configure the gigabitethernet0 0 and
packet tracer sba ospf ccna 3 bing pdf pdf black ortax - Jan 08 2023
web title packet tracer sba ospf ccna 3 bing pdf pdf black ortax org created date 9 2 2023 4 21 42 pm
packet tracer sba ospf ccna 3 bing - May 12 2023
web packet tracer sba ospf ccna 3 bing as recognized adventure as skillfully as experience very nearly lesson amusement as with ease as deal can be gotten by just checking out a books packet tracer sba ospf ccna 3 bing moreover it is not directly

done you could resign yourself to even more in this area this life something like the world

cisco packet tracer networking simulation tool - Aug 15 2023

web cisco packet tracer gain real skills with our powerful network simulation tool where you practice networking iot and cybersecurity skills in a virtual lab no hardware needed download packet tracer when you enroll in one of the three self paced packet tracer courses view courses

packet tracer sba ospf ccna 3 bing billie lee turner - Aug 03 2022

web jan 11 2023 4728788 packet tracer sba ospf ccna 3 bing 2 11 downloaded from knockinc com on by guest distinguished international contributors concerned with how classic mainly greek and latin but also arabic and portuguese texts become present in later cultures how they are passed on received and affect over time and space and

packet tracer sba ospf ccna 3 bing orientation sutd edu - Dec 07 2022

web practice sba ospf ccna 3 pdfsdocuments2 com ccna 3 packet tracer 261 answers bing pdfsdirnn com if you ally custom such a referred packet tracer sba ospf ccna 3 bing books that will find the money for you worth obtain the unquestionably best seller from us currently speakingfrom several preferred authors

packet tracer sba ospf ccna 3 bing orientation sutd edu sg - Apr 11 2023

web june 21st 2018 packet tracer sba ospf ccna 3 bing download thompson hanson dec 22 2017 mon 11 dec 2017 03 06 00 gmt packet tracer sba ospf ccna 3 bing download free ccna 3 practice skill ciscotr com may 9th 2018 ccna 3 practice skill drsent ospf acl pt practice sba do not close packet tracer when you are done it will close

how to configure ospf in packet tracer learnabhi com - Jul 14 2023

web sep 25 2018 this command allows you to create a route in ospf where 1 0 0 0 is the network id to which the router is connected to 0 255 255 255 is a wildcard mask which is the complete inverse of subnet mask the best way to find the wildcard mask is just subtract the subnet mask from 255 255 255 255 in this example the default subnet

packet tracer sba ospf ccna 3 bing full pdf neurocme med ucla - Feb 26 2022

web 2 packet tracer sba ospf ccna 3 bing 2022 11 30 ipv6 security protection measures for the next internet protocol as the world s networks migrate to the ipv6 protocol networking professionals need a clearer understanding of the security risks threats and challenges this transition presents in ipv6 security two of the world s leading

packet tracer sba ospf ccna 3 bing leslie schroeder - Mar 30 2022

web this online broadcast packet tracer sba ospf ccna 3 bing can be one of the options to accompany you gone having new time it will not waste your time agree to me the e book will agreed look you other issue to read just invest little get older to open this on line notice packet tracer sba ospf ccna 3 bing as competently as review them

packet tracer sba ospf ccna 3 bing pdf - Jun 13 2023

web packet tracer sba ospf ccna 3 bing network management principles and practice mar 14 2022 federal activities inventory reform act of 1998 oct 29 2020 practical network security feb 13 2022 prepare yourself for any type of audit and minimise security findings description this book is a guide

packet tracer sba ospf ccna 3 bing full pdf - Mar 10 2023

web packet tracer sba ospf ccna 3 bing network management nov 21 2022 the new edition of this popular book continues to explore the wealth of information available for network management showing users how to get data about a network and how to apply that data in managing a network effectively

packet tracer sba ospf ccna 3 bing full pdf admin store motogp - Apr 30 2022

web packet tracer sba ospf ccna 3 bing downloaded from admin store motogp com by guest moody ramos twelve years a slave prabhat prakashan this in depth technical guide is an essential resource for anyone involved in the development of smart mobile wireless technology including devices infrastructure and applications

lab 1 4 1 challenge review lab answers itexamanswers - Sep 16 2023

web nov 14 2023 disconnect and store the cabling for pc hosts that are normally connected to other networks such as the school lan or to the internet reconnect the appropriate cabling and restore the tcp ip settings lab 1 4 1 challenge review lab answers ccna 4 exploration 4 0 ewan accessing the wan lab answers

free pdf download packet tracer sba ospf ccna 3 bing - Feb 09 2023

web packet tracer sba ospf ccna 3 bing ccent icnd1 study guide feb 24 2021 cisco has announced big changes to its certification program as of february 24 2020 all current certifications will be retired and cisco will begin offering new certification programs the good news is if you re working toward any current ccna certification keep going

download solutions packet tracer sba ospf ccna 3 bing - Sep 04 2022

web packet tracer sba ospf ccna 3 bing if you ally craving such a referred packet tracer sba ospf ccna 3 bing books that will come up with the money for you worth get the definitely best seller from us currently from several preferred authors if you want to droll books lots of novels tale jokes and more fictions collections are with launched

packet tracer sba ospf ccna 3 bing download only - Nov 06 2022

web ebook packet tracer sba ospf ccna 3 bing is additionally useful you have remained in right site to start getting this info acquire the packet tracer sba ospf ccna 3 bing associate that we have enough money here and check out the link you could purchase guide packet tracer sba ospf ccna 3 bing or acquire it as soon as feasible you could

packet tracer sba ospf ccna 3 bing helpdesk bricksave - Oct 05 2022

web 4 packet tracer sba ospf ccna 3 bing 2022 04 20 cyber threats attacks metrics risk situational awareness intrusion detection and security testing providing an advantageous reference set for current system owners who wish to securely

configure and operate their icss this book is appropriate for non specialists as well tutorial

packet tracer sba ospf ccna 3 bing orientation sutd edu - Jul 02 2022

web ccna 4 wan technologies instructor lab manual and download ccna 4 packet tracer answers v5 packet tracer sba ospf ccna 3 bing ccna security instructor cisco pdf ccna exploration packet tracer free download ccna v5 question cisco configuration tool ccna v5 answer ccna exam v5 cisco access list cisco

packet tracer sba ospf ccna 3 bing pdf blueskywildlife - Jun 01 2022

web oct 2 2023 packet tracer sba ospf ccna 3 bing pdf recognizing the pretentiousness ways to get this book packet tracer sba ospf ccna 3 bing pdf is additionally useful you have remained in right site to start getting this info get the packet tracer sba ospf ccna 3 bing pdf belong to that we have enough money here and check out the link

america in color series 2 docuwiki - Nov 06 2022

web america in color series 2 contents hide 1 general information 2 cover 3 information 3 1 the wild west 3 2 titans of industry 3 3 organised crime 3 4 playtime 3 5 american

apple unveils iphone 15 series complete with usb c charging - Jan 28 2022

web sep 12 2023 as widely predicted following a series of leaks the iphone 15 series will have a usb c charging port replacing the traditional lightning port while the iphone 15 pro is

american color 2 by constantine manos lensculture com - Jun 13 2023

web from santa monica to new york city manos has captured the varied spectrum of contemporary life in all its offbeat and charming strangeness isbn 1593720386

american color 2 by constantine manos goodreads - May 12 2023

web jul 15 2010 in this brilliant new work magnum photographer constantine manos continues his exploration of the dynamic intersection between subject and time the real and the

watch america in color season 2 prime video amazon com - Sep 04 2022

web color footage of the rockefellers roosevelts and kennedys gives an unprecedented look at america s storied families unentitled unentitled free trial of paramount or buy

buy iphone 14 pro and iphone 14 pro max apple - Jun 01 2022

web iphone 14 or iphone 14 pro models purchased in the us or puerto rico don t have a physical sim tray and activate only using esim you can activate your iphone outside the

america in color tv series smithsonian channel - Oct 25 2021

web 2017 series tv pg witness early 20th century american history as it was experienced by those who lived through it in vibrant color watch season 1 ep 1

americancolor2 download only academy robotistan - Jul 22 2021
web americancolor2 2 4 downloaded from academy robotistan com on by guest werden operationalisiert anhand von lehnelementen in den romanen des rezeptologisch als
america in color season 2 watch episodes streaming online - Jul 02 2022
web streaming rent or buy america in color season 2 currently you are able to watch america in color season 2 streaming on my5 for free with ads or buy it as download
american color 2 photo book - Jul 14 2023
web the long awaited continuation of the celebrated collection american color in this brilliant new work magnum photographer constantine manos continues his exploration of the
pocketbook inkpad color 2 review an old color screen on an - Feb 09 2023
web 2 days ago some colors on the pocketbook inkpad color 2 look richer than before but not all image credit sharmishta sarkar techradar pocketbook inkpad color 2
american colour - Jun 20 2021
web american colour is a manufacturer and importer of high quality paint and paint products for over 10 years we have served customers all over india we are committed to
american color plastic cards silk business cards scratch - Aug 23 2021
web american color is a full color printer printing high quality plastic cards gift cards reward cards plastic key tags silk business cards with foil stamping spot uv die cut shapes
american color 2 uniport edu ng - May 20 2021
web mar 18 2023 american color 2 2 11 downloaded from uniport edu ng on march 18 2023 by guest describes photographers initial rejection of color their decades long debates
american color 2 hardcover july 15 2010 amazon com - Apr 11 2023
web jul 15 2010 the long awaited continuation of the celebrated collection american color in this brilliant new work magnum photographer constantine manos continues his
american color 2 in searchworks catalog - Mar 30 2022
web select search scope currently catalog all catalog articles website more in one search catalog books media more in the stanford libraries collections articles journal
american color 2 □□ □□ - Apr 30 2022
web in this brilliant new work magnum photographer constantine manos continues his exploration seen in american color of the dynamic intersection between subject and

american color 2 hardcover import 13 august 2010 amazon in - Nov 25 2021
web amazon in buy american color 2 book online at best prices in india on amazon in read american color 2 book reviews author details and more at amazon in free delivery
american color 2 constantine manos google books - Oct 05 2022
web in this brilliant new work magnum photographer constantine manos continues his exploration of the dynamic intersection between subject and time the real and the
america in color season 2 episodes paramount plus - Sep 23 2021
web nov 18 2018 at the dawn of the 20th century america west of the mississippi was wild and untamed featuring formidable landscapes and treacherous rivers but in the following
2024 ford f 150 truck pricing photos specs more ford com - Dec 07 2022
web sep 7 2023 impressive power you need with the efficiency you want the available 3 5l powerboost full hybrid v6 engine cranks out a hefty dose of power 430
american color 2 another something - Feb 26 2022
web in 1995 the extraordinary american color was published a greek portfolio was reissued in 1999 followed by a major exhibition of his work at the benaki museum of athens and
american color 2 magnum photos store - Aug 15 2023
web the long awaited continuation of the celebrated collection american color in this brilliant work constantine manos continues his exploration of the dynamic intersection between
amazon com american color 9780393039122 manos - Jan 08 2023
web oct 1 1995 a kaleidoscope of color photographs of candid moments within america s public places in american color constantine manos has created unique and complex
america in color season 2 episode 5 rotten tomatoes - Dec 27 2021
web synopsis a handful of wealthy powerful and interconnected families emerge to dominate the nation from the rockefellers to the vanderbilts these dynasties capture the imagination
american color 2 manos constantine amazon co uk - Mar 10 2023
web in this brilliant new work magnum photographer constantine manos continues his exploration of the dynamic intersection between subject and time the real and the
american color 2 english hardcover manos constantine - Aug 03 2022
web american color 2 by manos constantine from flipkart com only genuine products 30 day replacement guarantee free shipping cash on delivery explore plus login

la rue cases nègres roman by joseph zobel survey thecube - Apr 22 2022
web la rue cases nègres roman by joseph zobel on distingue à présent de la base au sommet une série de transition sablo gréseuse reposant sur les carbonates marins du paléozoïque ensuite des niveaux continentaux argilo sableux du trias avec aussi des grès les grès à stégocéphales précédant d épaisses formations d évaporites la

la rue cases nègres roman by joseph zobel survey thecube - Mar 22 2022
web la rue cases nègres roman by joseph zobel the rue st honore in paris is one ol the longest streets in the world it is the oxford street of the capital of france and has more chops and houses than even the boulevard at no great distance from tbe pala is royal

la rue cases na gres roman 2023 bespoke cityam com - Aug 27 2022
web la rue cases na gres roman la rue cases na gres roman 2 downloaded from bespoke cityam com on 2023 04 25 by guest le galop des ânes et avec des cris de joie entraînant toute la bande de mes petits camarades qui attendaient comme moi le retour de leurs parents m man tine savait qu étant venu au devant d elle je m étais bien conduit

la rue cases nègres roman by joseph zobel desk cw no - May 04 2023
web la rue cases nègres roman by joseph zobel april 9th 2020 the rue st honore in paris is one ol the longest streets in the world it is the oxford street of the capital of france and has more chops and houses than

la rue cases negres french edition amazon com - Mar 02 2023
web nov 1 2014 this item la rue cases negres french edition by joseph zobel mass market paperback 13 25 in stock ships from and sold by international book import service ibis l enfant noir prix charles veillon 1954 texte integral french edition by camara laye pocket book 5 30 only 16 left in stock order soon

la rue cases nègres roman by joseph zobel survey thecube - Jun 24 2022
web ocasio palacios 32 les structures sociales mises en place par l esclavage la rue cases nÂ gres 1950 de joseph zobel est l un e des meilleures reprÂ sentations fictives des sentiments des noirs envers la canne aprÂ s l abolition geography a village of forestry and farming in the pays de caux some 20 miles 32 km east of le havre

la rue cases na gres roman copy textra com - Dec 31 2022
web la rue cases na gres roman 3 3 indeed of the americas in general much of its passion pertinence and appeal inheres in its approach to time and to space an approach still reverberating with the shock of displacement and its various after tremors an exploded sense of diversity radical relativization the profound expropriations of

la rue cases na gres roman 2022 textra com - Oct 29 2022
web enveloppé dans un feuille verte ou encore mieux que tout cela un morceau de pain ainsi commence la rue cases nègres ce grand classique de la littérature antillaise dans lequel joseph zobel né le 26 avril 1915 à rivière salée nous décrit la

martinique des années 30 en peignant avec la

la rue cases nègres roman by joseph zobel - May 24 2022

web april 8th 2020 user talk edelseider from wikimedia mons the free media repository na es wäre doch schön wenn man sich la rue cases nègres roman by joseph zobel the weekly gazette barnesville ga 1868 186 december april 9th 2020 the rue st honore in paris is one ol the longest streets in the world it is the oxford street of the

la rue cases nègres roman by joseph zobel liululu - Jul 26 2022

web la rue cases nègres roman by joseph zobel romaunt of the rose from the unique glasgow ms parallel with its original le roman de la rose see other formats la poudrière ouvrage construit en 1806 pouvait contenir 300 barils de poudre des pierres de cette poudrière ont été em ployées pour ériger le mur situé sur la propriété de l hôtel

la rue cases na gres roman download only - Aug 07 2023

web whispering the strategies of language an mental journey through la rue cases na gres roman in a digitally driven world where screens reign supreme and instant transmission drowns out the subtleties of language the profound strategies and emotional subtleties hidden within phrases often go

la rue cases nègres roman joseph zobel google books - Jun 05 2023

web ainsi commence la rue cases nègres ce grand classique de la littérature antillaise dans lequel joseph zobel né le 26 avril 1915 à rivière salée nous décrit la martinique des années 30 en peignant avec la mémoire du coeur et des blessures la vaillance la dureté et la tendresse des descendants d esclaves acharnés á bâtir pour

la rue cases nègres roman zobel joseph archive org - Oct 09 2023

web la rue cases nègres roman by zobel joseph publication date 1984 topics blacks martinique fiction publisher paris présence africaine collection inlibrary printdisabled internetarchivebooks contributor internet archive language french 311 p 18 cm access restricted item true

la rue cases nègres wikipédia - Sep 08 2023

web modifier la rue cases nègres est un roman autobiographique de joseph zobel dont l action se déroule en martinique dans les années 1930 paru en 1950 ce roman raconte le quotidien d un enfant noir qui découvre l école et de

la rue cases nègres by joseph zobel goodreads - Jul 06 2023

web la rue cases negres par joseph zobel nous dit l histoire d un petit garcon qui habite avec sa grand mere et son enfance a la martinique j ai etudie ce roman dans ma premiere trimestre au lycee pour ma classe de la litterature francaise

la rue cases na gres roman copy textra com - Apr 03 2023

web la rue cases na gres roman downloaded from textra com tw by guest amina burch fictions of childhood abc clio organized by region boasting an international roster of contributors and including summaries of selected creative and critical

works and a guide to selected terms and figures salhi s

la rue cases na gres roman pdf data northitalia - Nov 29 2022

web la rue cases na gres roman the complete index to literary sources in film the post colonial condition of african literature black shack alley daughters of the diaspora the black jacobins encyclopedia of the african diaspora cinema and the second sex l ecrivain caribéen guerrier de l imaginaire enfance unravelled dreams where the boys are

la rue cases na gres roman pdf pdf sralergeno pybossa - Sep 27 2022

web title la rue cases na gres roman pdf pdf sralergeno pybossa com created date 9 30 2023 5 12 09 am

la rue cases na gres roman pqr uiaf gov co - Feb 18 2022

web insight of this la rue cases na gres roman can be taken as with ease as picked to act l ecrivain caribéen guerrier de l imaginaire kathleen gyssels 2008 01 this bi lingual collection illustrates the concept of warrior of the imaginary as defined by patrick chamoiseau in a multi faceted corpus of texts by and on caribbean writers

la rue cases negres ppt slideshare - Feb 01 2023

web oct 31 2009 la rue cases negres oct 31 2009 4 likes 6 582 views download now download to read offline business comparative analysis in french of the the book la rue cases negres and the film of the same name k