Assigning Wire-Reference (Terminal) Numbers. *Complete the required information for the line diagram.*

2. List the reference wire (terminal) number for each wire in the Security Door Lock System. Start by assigning L1 as wire number 1 and L2 as wire number 2. After marking wires as number 1 and number 2, assign numbers from the top left of the diagram to the bottom right. Number every wire in the circuit.

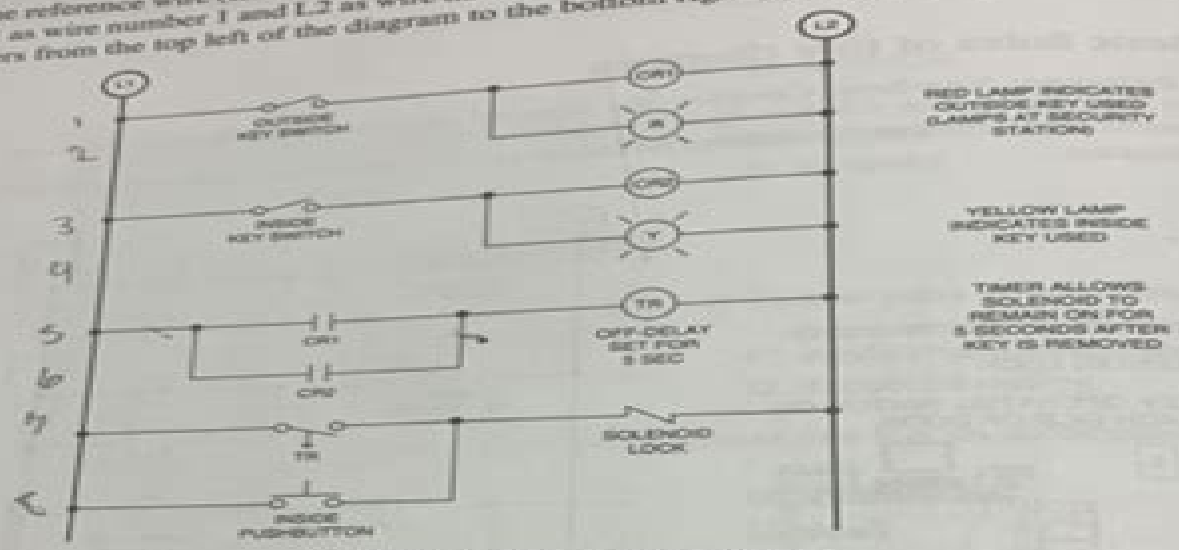

SECURITY DOOR LOCK SYSTEM

When wiring control stations, wire-reference numbers are used (usually added to wires) to help keep track of the wires in the system. Given each line diagram with wire-reference numbers, list the wire-reference numbers that would be used to identify each wire coming from the control stations.

2 _____ 3.

4 _____ 4.

3 _____ 5.

1 _____ 6.

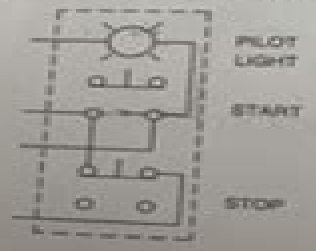

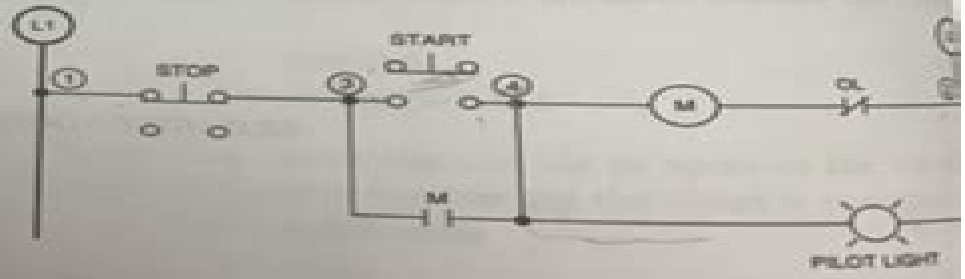

Electrical Motor Controls Workbook Answer Key

M Planty

Electrical Motor Controls Workbook Answer Key:

The Enigmatic Realm of **Electrical Motor Controls Workbook Answer Key**: Unleashing the Language is Inner Magic

In a fast-paced digital era where connections and knowledge intertwine, the enigmatic realm of language reveals its inherent magic. Its capacity to stir emotions, ignite contemplation, and catalyze profound transformations is nothing in short supply of extraordinary. Within the captivating pages of **Electrical Motor Controls Workbook Answer Key** a literary masterpiece penned with a renowned author, readers set about a transformative journey, unlocking the secrets and untapped potential embedded within each word. In this evaluation, we shall explore the book is core themes, assess its distinct writing style, and delve into its lasting impact on the hearts and minds of those who partake in its reading experience.

https://droplet2026.furrfu.com/files/detail/index.jsp/a181%2002%20may%202014.pdf

Table of Contents Electrical Motor Controls Workbook Answer Key

1. Understanding the eBook Electrical Motor Controls Workbook Answer Key
    - The Rise of Digital Reading Electrical Motor Controls Workbook Answer Key
    - Advantages of eBooks Over Traditional Books
2. Identifying Electrical Motor Controls Workbook Answer Key
    - Exploring Different Genres
    - Considering Fiction vs. Non-Fiction
    - Determining Your Reading Goals
3. Choosing the Right eBook Platform
    - Popular eBook Platforms
    - Features to Look for in an Electrical Motor Controls Workbook Answer Key
    - User-Friendly Interface
4. Exploring eBook Recommendations from Electrical Motor Controls Workbook Answer Key
    - Personalized Recommendations
    - Electrical Motor Controls Workbook Answer Key User Reviews and Ratings
    - Electrical Motor Controls Workbook Answer Key and Bestseller Lists

5. Accessing Electrical Motor Controls Workbook Answer Key Free and Paid eBooks
    - Electrical Motor Controls Workbook Answer Key Public Domain eBooks
    - Electrical Motor Controls Workbook Answer Key eBook Subscription Services
    - Electrical Motor Controls Workbook Answer Key Budget-Friendly Options
6. Navigating Electrical Motor Controls Workbook Answer Key eBook Formats
    - ePub, PDF, MOBI, and More
    - Electrical Motor Controls Workbook Answer Key Compatibility with Devices
    - Electrical Motor Controls Workbook Answer Key Enhanced eBook Features
7. Enhancing Your Reading Experience
    - Adjustable Fonts and Text Sizes of Electrical Motor Controls Workbook Answer Key
    - Highlighting and Note-Taking Electrical Motor Controls Workbook Answer Key
    - Interactive Elements Electrical Motor Controls Workbook Answer Key
8. Staying Engaged with Electrical Motor Controls Workbook Answer Key
    - Joining Online Reading Communities
    - Participating in Virtual Book Clubs
    - Following Authors and Publishers Electrical Motor Controls Workbook Answer Key
9. Balancing eBooks and Physical Books Electrical Motor Controls Workbook Answer Key
    - Benefits of a Digital Library
    - Creating a Diverse Reading Collection Electrical Motor Controls Workbook Answer Key
10. Overcoming Reading Challenges
    - Dealing with Digital Eye Strain
    - Minimizing Distractions
    - Managing Screen Time
11. Cultivating a Reading Routine Electrical Motor Controls Workbook Answer Key
    - Setting Reading Goals Electrical Motor Controls Workbook Answer Key
    - Carving Out Dedicated Reading Time
12. Sourcing Reliable Information of Electrical Motor Controls Workbook Answer Key
    - Fact-Checking eBook Content of Electrical Motor Controls Workbook Answer Key
    - Distinguishing Credible Sources
13. Promoting Lifelong Learning

- Utilizing eBooks for Skill Development
- Exploring Educational eBooks

14. Embracing eBook Trends
    - Integration of Multimedia Elements
    - Interactive and Gamified eBooks

Electrical Motor Controls Workbook Answer Key Introduction

Electrical Motor Controls Workbook Answer Key Offers over 60,000 free eBooks, including many classics that are in the public domain. Open Library: Provides access to over 1 million free eBooks, including classic literature and contemporary works. Electrical Motor Controls Workbook Answer Key Offers a vast collection of books, some of which are available for free as PDF downloads, particularly older books in the public domain. Electrical Motor Controls Workbook Answer Key : This website hosts a vast collection of scientific articles, books, and textbooks. While it operates in a legal gray area due to copyright issues, its a popular resource for finding various publications. Internet Archive for Electrical Motor Controls Workbook Answer Key : Has an extensive collection of digital content, including books, articles, videos, and more. It has a massive library of free downloadable books. Free-eBooks Electrical Motor Controls Workbook Answer Key Offers a diverse range of free eBooks across various genres. Electrical Motor Controls Workbook Answer Key Focuses mainly on educational books, textbooks, and business books. It offers free PDF downloads for educational purposes. Electrical Motor Controls Workbook Answer Key Provides a large selection of free eBooks in different genres, which are available for download in various formats, including PDF. Finding specific Electrical Motor Controls Workbook Answer Key, especially related to Electrical Motor Controls Workbook Answer Key, might be challenging as theyre often artistic creations rather than practical blueprints. However, you can explore the following steps to search for or create your own Online Searches: Look for websites, forums, or blogs dedicated to Electrical Motor Controls Workbook Answer Key, Sometimes enthusiasts share their designs or concepts in PDF format. Books and Magazines Some Electrical Motor Controls Workbook Answer Key books or magazines might include. Look for these in online stores or libraries. Remember that while Electrical Motor Controls Workbook Answer Key, sharing copyrighted material without permission is not legal. Always ensure youre either creating your own or obtaining them from legitimate sources that allow sharing and downloading. Library Check if your local library offers eBook lending services. Many libraries have digital catalogs where you can borrow Electrical Motor Controls Workbook Answer Key eBooks for free, including popular titles.Online Retailers: Websites like Amazon, Google Books, or Apple Books often sell eBooks. Sometimes, authors or publishers offer promotions or free periods for certain books.Authors Website Occasionally, authors provide excerpts or short stories for free on their websites. While this might not be the

Electrical Motor Controls Workbook Answer Key full book , it can give you a taste of the authors writing style.Subscription Services Platforms like Kindle Unlimited or Scribd offer subscription-based access to a wide range of Electrical Motor Controls Workbook Answer Key eBooks, including some popular titles.

FAQs About Electrical Motor Controls Workbook Answer Key Books

1. Where can I buy Electrical Motor Controls Workbook Answer Key books? Bookstores: Physical bookstores like Barnes & Noble, Waterstones, and independent local stores. Online Retailers: Amazon, Book Depository, and various online bookstores offer a wide range of books in physical and digital formats.
2. What are the different book formats available? Hardcover: Sturdy and durable, usually more expensive. Paperback: Cheaper, lighter, and more portable than hardcovers. E-books: Digital books available for e-readers like Kindle or software like Apple Books, Kindle, and Google Play Books.
3. How do I choose a Electrical Motor Controls Workbook Answer Key book to read? Genres: Consider the genre you enjoy (fiction, non-fiction, mystery, sci-fi, etc.). Recommendations: Ask friends, join book clubs, or explore online reviews and recommendations. Author: If you like a particular author, you might enjoy more of their work.
4. How do I take care of Electrical Motor Controls Workbook Answer Key books? Storage: Keep them away from direct sunlight and in a dry environment. Handling: Avoid folding pages, use bookmarks, and handle them with clean hands. Cleaning: Gently dust the covers and pages occasionally.
5. Can I borrow books without buying them? Public Libraries: Local libraries offer a wide range of books for borrowing. Book Swaps: Community book exchanges or online platforms where people exchange books.
6. How can I track my reading progress or manage my book collection? Book Tracking Apps: Goodreads, LibraryThing, and Book Catalogue are popular apps for tracking your reading progress and managing book collections. Spreadsheets: You can create your own spreadsheet to track books read, ratings, and other details.
7. What are Electrical Motor Controls Workbook Answer Key audiobooks, and where can I find them? Audiobooks: Audio recordings of books, perfect for listening while commuting or multitasking. Platforms: Audible, LibriVox, and Google Play Books offer a wide selection of audiobooks.
8. How do I support authors or the book industry? Buy Books: Purchase books from authors or independent bookstores. Reviews: Leave reviews on platforms like Goodreads or Amazon. Promotion: Share your favorite books on social media or recommend them to friends.

9. Are there book clubs or reading communities I can join? Local Clubs: Check for local book clubs in libraries or community centers. Online Communities: Platforms like Goodreads have virtual book clubs and discussion groups.
10. Can I read Electrical Motor Controls Workbook Answer Key books for free? Public Domain Books: Many classic books are available for free as theyre in the public domain. Free E-books: Some websites offer free e-books legally, like Project Gutenberg or Open Library.

Find Electrical Motor Controls Workbook Answer Key :

a181 02 may 2014
a repair manual for my pontiac
~~a technical report on workplace stress~~
a4 bentley service manual
a transition to advanced mathematics 7th edition solutions manual
a secret wish wish series english edition
~~aaa car rental coupons enterprise~~
a sanskrit coursebook for beginners sanskrit is fun part 1
a320 airport planning manual
a week by week guide
a small place
a sudden engagement love lost found book english edition
a292 business studies grade boundaries
aaa certified repair shops
a spy came home mac ambrose book 1

Electrical Motor Controls Workbook Answer Key :

a keyholder s handbook 1st edition kindle edition - Jan 30 2023
web buy tips tricks for keyholders an addendum to a keyholder s handbook 1 by green georgia ivey isbn 9781499660487 from amazon s book store everyday low
a keyholder s handbook 1st edition kindle edition - Aug 05 2023
web oct 28 2013 a keyholder s handbook kindle edition by green georgia ivey download it once and read it on your kindle

device pc phones or tablets use features like

a keyholder s handbook a woman s guide to male - Jun 03 2023

web buy a keyholder s handbook a woman s guide to male chastity by green georgia ivey isbn 9781493595372 from amazon s book store everyday low prices and free

tips tricks for keyholders by georgia ivey green open library - Jul 24 2022

web tips and tricks for keyholders an addendum to a keyholder s handbook georgia green google books georgia green createspace independent publishing platform

new book the official raspberry pi handbook 2024 is here - Nov 15 2021

a keyholder s handbook readanybook - Sep 06 2023

web read book a keyholder s handbook online free by author green georgia ivey online reading a keyholder s handbook and summary reviews this ebook may not be

tips and tricks for keyholders an addendum to a keyholder s - May 22 2022

web aug 26 2020 book description a complete guide to male chastity if you are new to male chastity or have been practicing it for years this book will guide you to a happier sex life

tips tricks for keyholders overdrive - Aug 25 2022

web jun 1 2014 book details edition notes source title tips tricks for keyholders an addendum to a keyholder s handbook the physical object format paperback

a keyholder s handbook a woman s guide to male chastity - Apr 01 2023

web oct 28 2013 armed with the information in this handbook you can become an expert at playing the chastity game once you know how to play he won t stand a chance this

tips tricks for keyholders an addendum to a - Jun 22 2022

web a keyholder s handbook a woman s guide to male chastity softcover green georgia ivey 4 04 avg rating 69 ratings by goodreads softcover isbn 10 1493595377 isbn

a keyholder s handbook a woman s guide to male - May 02 2023

web a keyholder s handbook a woman s guide to male chastity green georgia ivey amazon com tr ofis ve kırtasiye

a keyholder s handbook georgia ivey green google books - Jul 04 2023

web oct 28 2013 georgia ivey green mistress ivey oct 28 2013 102 pages a complete guide to male chastity if you are new to male chastity or have been practicing it for

tips tricks for keyholders an addendum to a - Dec 29 2022

web may 2 2014 a keyholder s handbook by green georgia ivey free ebooks download home self help relationships marriage a keyholder s handbook by green

a keyholder s handbook 1st edition kindle edition amazon co uk - Oct 27 2022

web dec 1 2017 tips tricks for keyholders an addendum to a keyholders handbook georgia ivey green google books georgia ivey green mistress ivey dec 1 2017 65

keyholder definition in the cambridge english dictionary - Oct 15 2021

a keyholder s handbook a yumpu - Mar 20 2022

web definition of keyholder in the definitions net dictionary meaning of keyholder what does keyholder mean information and translations of keyholder in the

a keyholder s handbook by georgia ivey green overdrive - Feb 28 2023

web select the department you want to search in

a keyholder s handbook read online free without - Oct 07 2023

web a keyholder s handbook home fiction 8 7 10 3 download other files 1 prev download this book next a keyholder s handbook read free ebook by green

keyholder definition meaning yourdictionary - Dec 17 2021

web keyholder meaning a person who has been chosen to have responsibility for the keys of a particular building etc learn more

a keyholder s handbook by green georgia ivey - Nov 27 2022

web a keyholder s handbook 1st edition kindle edition a complete guide to male chastity if you are new to male chastity or have been practicing it for years this book will guide you

tips tricks for keyholders an addendum to a keyholders - Sep 25 2022

web jun 24 2014 this is the perfect companion to her previous book a keyholder s handbook this volume guides the dominant woman or woman in charge through

keyholder english meaning cambridge dictionary - Feb 16 2022

web keyholder definition one who holds the key to a building etc for security reasons

what does keyholder mean definitions net - Jan 18 2022

web 19 hours ago that s at least one christmas present ticked off your list grab your copy of the official raspberry pi handbook 2024 for just 14 from the raspberry pi press

a keyholder s handbook a woman s guide to male chastity - Apr 20 2022

web keyholder definition a person who has been chosen to have responsibility for the keys of a particular building etc learn more

j apprends a dessiner les super ha c ros pdf - Nov 17 2021

web j apprends a dessiner les super ha c ros 5 5 présente 9 modèles de chats le chat roux le chaton joueur la sieste le repas le siamois le chat de gouttière au jardin les

j apprends a dessiner les super ha c ros pdf stage gapinc - Mar 02 2023

web j apprends à dessiner les sirènes les contesune méthode facile et ludique pour tout dessiner les princesses et les chevalierspour créer de merveilleux dessins

j apprends a dessiner les super ha c ros uniport edu - Mar 22 2022

web j apprends a dessiner les super ha c ros 1 7 downloaded from uniport edu ng on october 24 2023 by guest j apprends a dessiner les super ha c ros as

pdf j apprends a dessiner les super ha c ros - Jul 06 2023

web j apprends a dessiner les super ha c ros j apprends à dessiner les animaux jul 03 2021 le cadeau idéal pour les enfants vous cherchez un cadeau pour vos

j apprends a dessiner les super ha c ros cecil stuart - May 24 2022

web apprends a dessiner les super ha c ros as you such as by searching the title publisher or authors of guide you essentially want you can discover them rapidly

j apprends a dessiner les super ha c ros pdf uniport edu - Aug 07 2023

web oct 25 2023 apprendre à dessiner des personnages kawaii super héros d une manière simple et pas à pas vous cherchez le meilleur guide pour vous enseigner les

j apprends a dessiner les super ha c ros pdf jtfnetoo - Dec 19 2021

web j apprends a dessiner les super ha c ros les dragons j apprends à dessiner les monstres j apprends à dessiner les métiers de a à z j apprends à dessiner les

j apprends a dessiner les super ha c ros pdf old syndeohro - Oct 09 2023

web 2 j apprends a dessiner les super ha c ros 2023 09 12 une méthode reconnue et facile en quatre étapes pour apprendre à dessiner comme les grands le vocabulaire

j apprends a dessiner les super ha c ros - May 04 2023

web enter the realm of j apprends a dessiner les super ha c ros a mesmerizing literary masterpiece penned by way of a distinguished author guiding readers on a profound

j apprends a dessiner les super ha c ros uniport edu - Apr 22 2022

web oct 24 2023 j apprends a dessiner les super ha c ros 2 8 downloaded from uniport edu ng on october 24 2023 by guest fleurs du mal 1857 he was already

j apprends a dessiner les super ha c ros uniport edu - Sep 27 2022

web may 2 2023 j apprends a dessiner les super ha c ros 1 12 downloaded from uniport edu ng on may 2 2023 by guest j apprends a dessiner les super ha c ros

j apprends a dessiner les super ha c ros pdf dna viz tpq - Jun 05 2023

web oct 30 2023 j apprends a dessiner les super ha c ros 1 omb no 4391927603546 j apprends a dessiner les super ha c ros j apprends à dessiner les sirènes

j apprends a dessiner les super ha c ros 2022 2013 - Feb 18 2022

web 2 j apprends a dessiner les super ha c ros 2023 07 07 j apprends a dessiner les super ha c ros downloaded from 2013 thecontemporaryaustin org by guest lennon

j apprends a dessiner les super ha c ros copy uniport edu - Dec 31 2022

web oct 24 2023 j apprends a dessiner les super ha c ros is available in our digital library an online access to it is set as public so you can download it instantly our digital library

j apprends a dessiner les super ha c ros pdf uniport edu - Sep 08 2023

web j apprends a dessiner les super ha c ros 1 5 downloaded from uniport edu ng on october 27 2023 by guest j apprends a dessiner les super ha c ros this is

j apprends a dessiner les super ha c ros workandmothertest - Jun 24 2022

web j apprends à dessiner les contes les animaux du monde les princesses et les chevaliers les super héros j apprends à dessiner les bateaux j apprends a dessiner les

j apprends a dessiner les super ha c ros smtp ablogtowatch - Aug 27 2022

web dessiner les super ha c ros j apprends à dessiner les dinosaures les contes j apprends à dessiner les contes j apprends à dessiner les fées les monstres

j apprends a dessiner les super ha c ros copy uniport edu - Apr 03 2023

web sep 18 2023 j apprends a dessiner les super ha c ros is available in our book collection an online access to it is set as public so you can download it instantly our digital library

j apprends a dessiner les super ha c ros pdf sportidapp - Oct 29 2022

web feb 17 2023 4 j apprends a dessiner les super ha c ros 2022 02 08 panda le castor le tigre le bison le raton laveur le kangourou le koala le ouistiti les voitures

j apprends à dessiner les super héros fleuruseditions com - Feb 01 2023

web j apprends à dessiner les super héros une méthode reconnue et facile en quatre étapes pour apprendre à dessiner comme les grands le vocabulaire des formes

cours de dessin de super héros bd pour enfants avec lezartistes fr - Jul 26 2022

web 15 décembre 2015 léo pour ce cours de dessin j accueille octavie qui a 10 ans elle a choisi d apprendre à dessiner mario un des plus célèbre héros de jeux vidéo

apprendre à dessiner les super héros youtube - Nov 29 2022

web apr 22 2016 voici des vidéos pour que les enfants apprennent comment dessiner leurs héros préférés ninja spiderman superman batman un ogre ou un vampire

j apprends a dessiner les super ha c ros pdf data northitalia - Jan 20 2022

web autour de la thématique des monstres halloween le fantôme le vampire le cyclope la créature de l espace le loup garou le squelette le savant fou le diablotin j apprends

chiedilo all orango recensioni consigli e percorsi di lettura per - Jun 22 2022

web sep 10 2019 we would like to show you a description here but the site won t allow us

la danza delle rane quarzo guido vivarelli anna mauri silvia - Apr 01 2023

web un bizzarro personaggio va in cerca di rane lungo i torrenti sotto gli occhi di antonio il giovane figlio di un mugnaio inizia così il sodalizio fra uno dei più grandi scienziati italiani dell illuminismo l abate lazzaro spallanzani professore naturalista e biologo e un ragazzo di umili origini ma intelligente curioso e desideroso di impa

la danza delle rane italian edition kindle edition amazon com - Feb 28 2023

web jun 18 2020 campagne di scandiano seconda metà del settecento un bizzarro personaggio va in cerca di rane lungo i torrenti sotto gli occhi di antonio il giovane figlio di un mugnaio inizia così il sodalizio fra uno dei più grandi scienziati italiani dell illuminismo l abate lazzaro spallanzani professore naturalista e biologo e un ragazzo di

la danza delle rane di guido quarzo e anna vivarelli - Sep 06 2023

web may 4 2019 la danza delle rane racconta la storia di antonio un bambino curioso attento e capace di porsi sempre molte domande e assistente di lazzaro spallanzani ma narra anche quel settecento colmo di sospetti e difficoltà diffidenza verso la scienza e

le rane wikipedia - Mar 20 2022

web le rane in greco antico così anche tra i cittadini quelli che conosciamo per nobili saggi giusti educati nelle palestre alla danza alla musica questi li scartiamo e ci avvaliamo invece delle facce di bronzo forestieri furfanti e figli di furfanti gli ultimi venuti che un tempo la città non avrebbe usato nemmeno come capri

la danza delle rane by editoriale scienza issuu - Jul 24 2022

web apr 9 2019 di g quarzo a vivarelli ill di s mauri un avventuroso romanzo di formazione ambientato nel 700 la storia del sodalizio tra un vispo ragazzino e lazzaro spallanzani naturalista e

la danza delle rane 2 capitolo youtube - May 22 2022

web apr 17 2020 maratona di lettura degli insegnanti di castel maggioreleggiamola danza delle rane di guido quarzo e anna vivarellieditoriale scienza2 capitolo ogni nome

la danza delle rane romanzo per bambini da 9 anni - Oct 07 2023

web un bizzarro personaggio va in cerca di rane lungo i torrenti e sotto gli occhi di antonio il giovane figlio di un mugnaio inizia così il sodalizio fra uno dei più grandi scienziati italiani dell illuminismo l abate lazzaro spallanzani professore naturalista e biologo e un ragazzo di umili origini intelligente curioso e desideroso

recensioni la danza delle rane libreria ibs - Sep 25 2022

web la danza delle rane è un libro di guido quarzo anna vivarelli pubblicato da editoriale scienza leggi le recensioni degli utenti e acquistalo online su ibs

la danza delle rane giunti giunti editore - Aug 05 2023

web campagne di scandiano seconda metà del settecento un bizzarro personaggio va in cerca di rane lungo i torrenti sotto gli occhi di antonio il giovane figlio di un mugnaio inizia così il sodalizio fra uno dei più grandi scienziati italiani dell illuminismo l abate lazzaro spallanzani professore naturalista e biologo e un ragazzo di

la danza delle rane guido quarzo anna vivarelli - Jan 30 2023

web campagne di scandiano seconda metà del settecento un bizzarro personaggio va in cerca di rane lungo i torrenti sotto gli occhi di antonio il giovane figlio di un mugnaio inizia così il sodalizio fra uno dei più grandi scienziati italiani dell illuminismo l abate lazzaro spallanzani professore naturalista e biologo e un ragazzo di

la danza delle rane guido quarzo anna vivarelli libro - Dec 29 2022

web la danza delle rane è un libro di guido quarzo anna vivarelli pubblicato da editoriale scienza nella collana racconti di scienza acquista su ibs a 9 90

la danza delle rane g quarzo a vivarelli s mauri editoriale - Aug 25 2022

web apr 29 2019 la danza delle rane guido quarzo e anna vivarelli testo silvia mauri illustrazioni editoriale scienza anno di pubblicazione 2019 128 pp 13 x 19 5 cm prezzo di copertina 9 90 euro età di lettura dai 9 anni

la danza delle rane by guido quarzo goodreads - Jul 04 2023

web la danza delle rane guido quarzo anna vivarelli 4 18 22 ratings3 reviews un avventuroso romanzo di formazione ambientato nel 700 la storia del sodalizio tra un vispo ragazzino e lazzaro spallanzani naturalista e biologo campagne di

amazon it recensioni clienti la danza delle rane - Oct 27 2022

web consultare utili recensioni cliente e valutazioni per la danza delle rane su amazon it consultare recensioni obiettive e imparziali sui prodotti fornite dagli utenti

la danza delle rane fondazione pirelli - May 02 2023

web la danza delle rane avvicinare i giovani lettori a temi scientifici attraverso la storia di un loro coetaneo è un ottimo punto di partenza per questo romanzo accompagnato da incantevoli illustrazioni e arrivato tra i finalisti del premio strega 2020 per ragazzi

la danza delle rane ibby italia - Apr 20 2022

web apr 7 2020 la danza delle rane di silvana sola 7 aprile 2020 il nome spallanzani è diventato famigliare e abita le case dell intero paese

danza delle rane song and lyrics by daniele mellani spotify - Feb 16 2022

web listen to danza delle rane on spotify daniele mellani song 2009 daniele mellani song 2009 listen to danza delle rane on spotify daniele mellani song 2009 sign up log in home search your library create your

la danza delle rane l amore il dolore la scienza e la giustizia - Nov 27 2022

web aug 13 2019 la danza delle rane antonio è il figlio di un mugnaio quando non aiuta il padre va in giro per la campagna a piedi nudi dentro e fuori dalle rogge un giorno siamo a scandiano reggio

la danza delle rane milkbook it - Jun 03 2023

web may 13 2019 la danza delle rane d i guido quarzo e anna vivarelli illustrazioni di silvia mauri editoriale scienza 2019 età di lettura suggerita dai 9 anni la storia si svolge nelle campagne di scandiano in provincia di reggio emilia nel 1700 in pieno illuminismo