Decoder-Based Combinational Circuit

Example: Decoder and OR-Gate Implementation of 1-Bit Binary Adder

Input			Output	
X	Y	Z	C	S
0	0	0	0	0
0	0	1	0	1
0	1	0	0	1
0	1	1	1	0
1	0	0	0	1
1	0	1	1	0
1	1	0	1	0
1	1	1	1	1

Truth Table for 1-bit Binary Adder

$S(X,Y,Z) = \sum m(1,2,4,7)$

$C(X,Y,Z) = \sum m(3,5,6,7)$

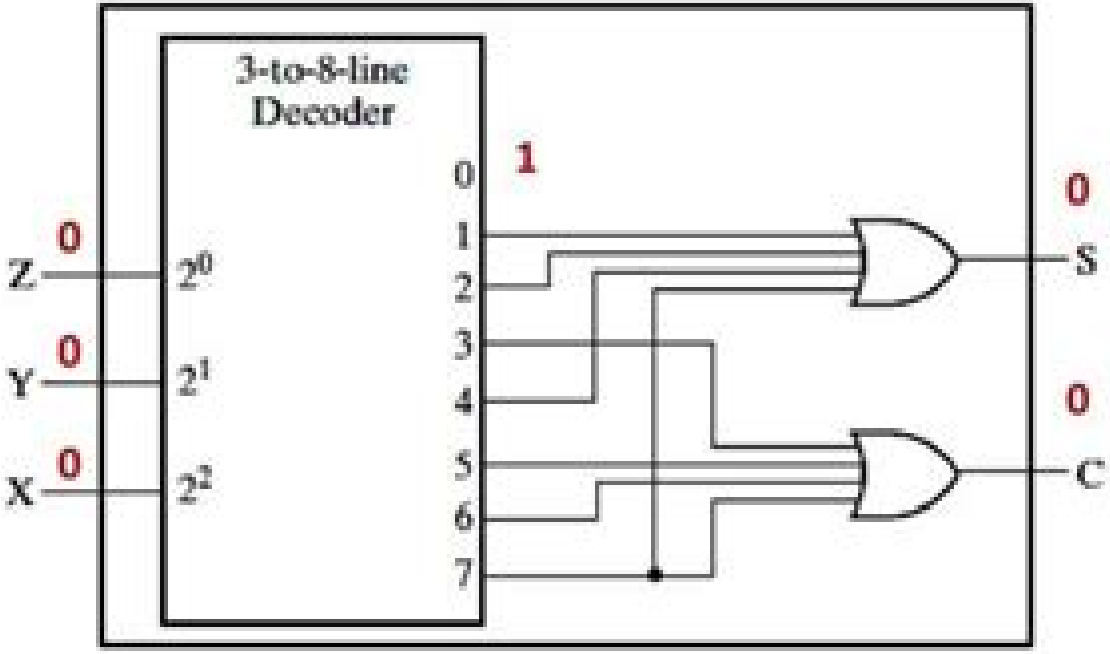

Logic Diagram

Test circuit on any combination.

Daffynition Decoder B Key

Michael Rajnik

Daffynition Decoder B Key:

Immerse yourself in the artistry of words with is expressive creation, Immerse Yourself in **Daffynition Decoder B Key** . This ebook, presented in a PDF format (*), is a masterpiece that goes beyond conventional storytelling. Indulge your senses in prose, poetry, and knowledge. Download now to let the beauty of literature and artistry envelop your mind in a unique and expressive way.

https://droplet2026.furrfu.com/public/uploaded-files/index.jsp/takeuchi_tb070_compact_excavator_service_repair_manual.pdf

Table of Contents Daffynition Decoder B Key

1. Understanding the eBook Daffynition Decoder B Key
    - The Rise of Digital Reading Daffynition Decoder B Key
    - Advantages of eBooks Over Traditional Books
2. Identifying Daffynition Decoder B Key
    - Exploring Different Genres
    - Considering Fiction vs. Non-Fiction
    - Determining Your Reading Goals
3. Choosing the Right eBook Platform
    - Popular eBook Platforms
    - Features to Look for in an Daffynition Decoder B Key
    - User-Friendly Interface
4. Exploring eBook Recommendations from Daffynition Decoder B Key
    - Personalized Recommendations
    - Daffynition Decoder B Key User Reviews and Ratings
    - Daffynition Decoder B Key and Bestseller Lists
5. Accessing Daffynition Decoder B Key Free and Paid eBooks
    - Daffynition Decoder B Key Public Domain eBooks
    - Daffynition Decoder B Key eBook Subscription Services
    - Daffynition Decoder B Key Budget-Friendly Options

6. Navigating Daffynition Decoder B Key eBook Formats
    - ePub, PDF, MOBI, and More
    - Daffynition Decoder B Key Compatibility with Devices
    - Daffynition Decoder B Key Enhanced eBook Features
7. Enhancing Your Reading Experience
    - Adjustable Fonts and Text Sizes of Daffynition Decoder B Key
    - Highlighting and Note-Taking Daffynition Decoder B Key
    - Interactive Elements Daffynition Decoder B Key
8. Staying Engaged with Daffynition Decoder B Key
    - Joining Online Reading Communities
    - Participating in Virtual Book Clubs
    - Following Authors and Publishers Daffynition Decoder B Key
9. Balancing eBooks and Physical Books Daffynition Decoder B Key
    - Benefits of a Digital Library
    - Creating a Diverse Reading Collection Daffynition Decoder B Key
10. Overcoming Reading Challenges
    - Dealing with Digital Eye Strain
    - Minimizing Distractions
    - Managing Screen Time
11. Cultivating a Reading Routine Daffynition Decoder B Key
    - Setting Reading Goals Daffynition Decoder B Key
    - Carving Out Dedicated Reading Time
12. Sourcing Reliable Information of Daffynition Decoder B Key
    - Fact-Checking eBook Content of Daffynition Decoder B Key
    - Distinguishing Credible Sources
13. Promoting Lifelong Learning
    - Utilizing eBooks for Skill Development
    - Exploring Educational eBooks
14. Embracing eBook Trends
    - Integration of Multimedia Elements

- Interactive and Gamified eBooks

Daffynition Decoder B Key Introduction

Daffynition Decoder B Key Offers over 60,000 free eBooks, including many classics that are in the public domain. Open Library: Provides access to over 1 million free eBooks, including classic literature and contemporary works. Daffynition Decoder B Key Offers a vast collection of books, some of which are available for free as PDF downloads, particularly older books in the public domain. Daffynition Decoder B Key : This website hosts a vast collection of scientific articles, books, and textbooks. While it operates in a legal gray area due to copyright issues, its a popular resource for finding various publications. Internet Archive for Daffynition Decoder B Key : Has an extensive collection of digital content, including books, articles, videos, and more. It has a massive library of free downloadable books. Free-eBooks Daffynition Decoder B Key Offers a diverse range of free eBooks across various genres. Daffynition Decoder B Key Focuses mainly on educational books, textbooks, and business books. It offers free PDF downloads for educational purposes. Daffynition Decoder B Key Provides a large selection of free eBooks in different genres, which are available for download in various formats, including PDF. Finding specific Daffynition Decoder B Key, especially related to Daffynition Decoder B Key, might be challenging as theyre often artistic creations rather than practical blueprints. However, you can explore the following steps to search for or create your own Online Searches: Look for websites, forums, or blogs dedicated to Daffynition Decoder B Key, Sometimes enthusiasts share their designs or concepts in PDF format. Books and Magazines Some Daffynition Decoder B Key books or magazines might include. Look for these in online stores or libraries. Remember that while Daffynition Decoder B Key, sharing copyrighted material without permission is not legal. Always ensure youre either creating your own or obtaining them from legitimate sources that allow sharing and downloading. Library Check if your local library offers eBook lending services. Many libraries have digital catalogs where you can borrow Daffynition Decoder B Key eBooks for free, including popular titles.Online Retailers: Websites like Amazon, Google Books, or Apple Books often sell eBooks. Sometimes, authors or publishers offer promotions or free periods for certain books.Authors Website Occasionally, authors provide excerpts or short stories for free on their websites. While this might not be the Daffynition Decoder B Key full book , it can give you a taste of the authors writing style.Subscription Services Platforms like Kindle Unlimited or Scribd offer subscription-based access to a wide range of Daffynition Decoder B Key eBooks, including some popular titles.

FAQs About Daffynition Decoder B Key Books

How do I know which eBook platform is the best for me? Finding the best eBook platform depends on your reading

preferences and device compatibility. Research different platforms, read user reviews, and explore their features before making a choice. Are free eBooks of good quality? Yes, many reputable platforms offer high-quality free eBooks, including classics and public domain works. However, make sure to verify the source to ensure the eBook credibility. Can I read eBooks without an eReader? Absolutely! Most eBook platforms offer webbased readers or mobile apps that allow you to read eBooks on your computer, tablet, or smartphone. How do I avoid digital eye strain while reading eBooks? To prevent digital eye strain, take regular breaks, adjust the font size and background color, and ensure proper lighting while reading eBooks. What the advantage of interactive eBooks? Interactive eBooks incorporate multimedia elements, quizzes, and activities, enhancing the reader engagement and providing a more immersive learning experience. Daffynition Decoder B Key is one of the best book in our library for free trial. We provide copy of Daffynition Decoder B Key in digital format, so the resources that you find are reliable. There are also many Ebooks of related with Daffynition Decoder B Key. Where to download Daffynition Decoder B Key online for free? Are you looking for Daffynition Decoder B Key PDF? This is definitely going to save you time and cash in something you should think about. If you trying to find then search around for online. Without a doubt there are numerous these available and many of them have the freedom. However without doubt you receive whatever you purchase. An alternate way to get ideas is always to check another Daffynition Decoder B Key. This method for see exactly what may be included and adopt these ideas to your book. This site will almost certainly help you save time and effort, money and stress. If you are looking for free books then you really should consider finding to assist you try this. Several of Daffynition Decoder B Key are for sale to free while some are payable. If you arent sure if the books you would like to download works with for usage along with your computer, it is possible to download free trials. The free guides make it easy for someone to free access online library for download books to your device. You can get free download on free trial for lots of books categories. Our library is the biggest of these that have literally hundreds of thousands of different products categories represented. You will also see that there are specific sites catered to different product types or categories, brands or niches related with Daffynition Decoder B Key. So depending on what exactly you are searching, you will be able to choose e books to suit your own need. Need to access completely for Campbell Biology Seventh Edition book? Access Ebook without any digging. And by having access to our ebook online or by storing it on your computer, you have convenient answers with Daffynition Decoder B Key To get started finding Daffynition Decoder B Key, you are right to find our website which has a comprehensive collection of books online. Our library is the biggest of these that have literally hundreds of thousands of different products represented. You will also see that there are specific sites catered to different categories or niches related with Daffynition Decoder B Key So depending on what exactly you are searching, you will be able tochoose ebook to suit your own need. Thank you for reading Daffynition Decoder B Key. Maybe you have knowledge that, people have search numerous times for their favorite readings like this Daffynition Decoder B Key, but end up in harmful downloads. Rather than reading a

good book with a cup of coffee in the afternoon, instead they juggled with some harmful bugs inside their laptop. Daffynition Decoder B Key is available in our book collection an online access to it is set as public so you can download it instantly. Our digital library spans in multiple locations, allowing you to get the most less latency time to download any of our books like this one. Merely said, Daffynition Decoder B Key is universally compatible with any devices to read.

Find Daffynition Decoder B Key :

takeuchi tb070 compact excavator service repair manual
boeing 777 repair manual
~~elasticity tensor dyadic and engineering approaches nicholas j pagano~~
link belt excavator manual 5800
2008 ap biology practice exam answers
ein lotos erblaht im herzen die kunst des achtsamen lebens
porsche 911 carrera 1993 1998 full service repair manual
ein magier
sociological perspective lesson plan
~~brolach alpha warriors of the demonic the demon series book 1~~
firmeza y ternura
porsche 911 carrera 2 1989 1994 factory service repair manua
manual boeing 737 pma 3 part 2
wiring for 1993 mercruiser 3 7
how to survive as a teen when no one understands

Daffynition Decoder B Key :

amazon com il potere di un sussurro la prima guida italiana - May 03 2023
web amazon com il potere di un sussurro la prima guida italiana all asmr audible audio edition chiara asmr chiara asmr mondadori libri s p a books
il potere di un sussurro audiolibro chiara asmr audible it in - Oct 28 2022
web il potere di un sussurro la prima guida italiana all asmr di chiara asmr letto da chiara asmr durata 4 ore e 9 min
il potere di un sussurro la prima guida italiana all asmr - Sep 07 2023

web il potere di un sussurro la prima guida italiana all asmr chiara asmr amazon it libri
il potere di un sussurro la prima guida italiana all asmr chiara - May 23 2022
web il potere di un sussurro la prima guida italiana all asmr chiara asmr amazon es libros
il potere di un sussurro la prima guida italiana all asmr italian - Nov 28 2022
web il potere di un sussurro la prima guida italiana all asmr italian edition ebook asmr chiara amazon co uk books
chiara asmr libro il potere di un sussurro la prima guida italiana - Aug 26 2022
web oct 7 2019 chiara asmr ha scritto un libro che è la prima prima guida italiana all asmr il potere di un sussurro è il titolo in libreria dall 8 ottobre
il potere di un sussurro la prima guida italiana 2022 - Feb 17 2022
web al di là del cielo e del mare deanor il potere di un sussurro la prima guida italiana all asmr l arte del mediatore dei conflitti protocolli senza regole una formazione possibile a s s a s s i n a t i o n muses 2 la decima musa il genio della fonte phaos la percezione del nero la rosa dei venti 2 la dispersione messalina di brughiera
il potere di un sussurro la prima guida italiana all asmr fnac - Jan 31 2023
web la prima guida italiana all asmr il potere di un sussurro chiara asmr mondadori electa des milliers de livres avec la livraison chez vous en 1 jour ou en magasin avec 5 de réduction il potere di un sussurro la prima guida italiana all asmr ebook epub chiara asmr achat ebook fnac
il potere di un sussurro la prima guida italiana all asmr paperback - Apr 21 2022
web hello sign in account lists returns orders cart
il potere di un sussurro la prima guida italiana all asmr - Jun 04 2023
web il potere di un sussurro la prima guida italiana all asmr è un ebook di chiara asmr pubblicato da mondadori electa a 9 99 il file è in formato epub3 con adobe drm risparmia online con le offerte ibs
il potere di un sussurro la prima guida italiana all asmr - Aug 06 2023
web il potere di un sussurro la prima guida italiana all asmr edizione audible chiara asmr chiara asmr mondadori libri s p a amazon it libri
il potere di un sussurro la prima guida italiana all asmr - Jul 25 2022
web acquista il potere di un sussurro la prima guida italiana all asmr su libreria universitaria spedizione gratuita sopra i 25 euro su libreria universitaria
il potere di un sussurro la prima guida italiana all asmr - Mar 01 2023
web acquista online il libro il potere di un sussurro la prima guida italiana all asmr di chiara asmr in offerta a prezzi imbattibili su mondadori store

amazon it recensioni clienti il potere di un sussurro la prima guida - Dec 30 2022
web consultare utili recensioni cliente e valutazioni per il potere di un sussurro la prima guida italiana all asmr su amazon it consultare recensioni obiettive e imparziali sui prodotti fornite dagli utenti passa al contenuto principale it in consegna a roma 00185
il potere di un sussurro la prima guida italiana all asmr paperback - Jun 23 2022
web amazon in buy il potere di un sussurro la prima guida italiana all asmr book online at best prices in india on amazon in read il potere di un sussurro la prima guida italiana all asmr book reviews author details and more at
il potere di un sussurro la prima guida italiana all asmr - Apr 02 2023
web oct 8 2019 amazon com il potere di un sussurro la prima guida italiana all asmr 9788891823120 chiara asmr books
il potere di un sussurro la prima guida italiana all asmr - Jul 05 2023
web il potere di un sussurro la prima guida italiana all asmr ebook asmr chiara amazon it libri
il potere di un sussurro la prima guida italiana all asmr - Oct 08 2023
web il potere di un sussurro la prima guida italiana all asmr è un libro di chiara asmr pubblicato da mondadori electa acquista su ibs a 17 96
il potere di un sussurro la prima guida italiana download - Mar 21 2022
web il potere di un sussurro la prima guida italiana 1 il potere di un sussurro la prima guida italiana la nave della pazzia i mercanti di borgomago 2 visioni la rosa dei venti 2 la dispersione messalina di brughiera la coscienza di cain il fattore scatenante ultimo oceano la lacrima dell ibisco volume 2 la forza degli uomini
il potere di un sussurro apple books - Sep 26 2022
web oct 8 2019 cercando l acronimo asmr su youtube si possono trovare milioni di video in cui giovani ragazzi sussurrano ai microfoni fanno schioccare la lingua o picchiettano con le dita sui registratori nel tentativo di provocare in chi li guarda dei brividi lungo la schiena e un senso di profondo rilassament
kammerflimmern und kammerflattern navigator medizin - Sep 22 2021
web oct 25 2022 auch beim kammerflattern ist die erregung des herzmuskels durcheinander geraten und kreist unkoordiniert im gegensatz zum kammerflimmern geschieht dies
kammerflimmern lenz zweiter fall almanca kağıt kapak - Jan 07 2023
web kammerflimmern lenz zweiter fall gibert matthias p amazon com tr Çerez tercihlerinizi seçin alışveriş deneyiminizi geliştirmek hizmetlerimizi sunmak müşterilerin
kammerflimmern lenz zweiter fall google books - Apr 10 2023
web dezember 2007 wolfgang goldberg justiziar der industrie und handelskammer kassel wird erhängt in einem wald bei

kassel gefunden in derselben nacht brennt sein haus
kammerflimmern symptome und wiederbelebung netdoktor de - Nov 24 2021
web kammerflimmern ist eine lebensgefährliche herzrhythmusstörung das herz ist nicht mehr in der lage blut zu pumpen die betroffenen werden innerhalb von sekunden
kammerflimmern lenz zweiter fall lenz krimi 2 amazon de - Aug 14 2023
web kammerflimmern lenz zweiter fall lenz krimi 2 kindle ausgabe von matthias p gibert autor format kindle ausgabe 4 2 4 2 von 5 sternen 136 sternebewertungen
kammerflimmern lenz zweiter fall amazon de - Feb 08 2023
web 2 24
kammerflimmern on apple books - Nov 05 2022
web jul 2 2008 lenz zweiter fall matthias p gibert 9 99 publisher description dezember 2007 wolfgang goldberg justiziar der industrie und handelskammer kassel wird
kammerflimmern lenz zweiter fall lenz krimi 2 german - Aug 02 2022
web jul 2 2008 kammerflimmern lenz zweiter fall lenz krimi 2 german edition ebook gibert matthias p amazon co uk kindle store
details zu kammerflimmern lenz zweiter fall stadtbücherei - May 31 2022
web kammerflimmern zusammenfassung der kasseler hauptkommissar paul lenz jagt in seinem 2 fall die russenmafia sowie einheimische kriminelle und muss die aufdeckung
kammerflimmern paul lenz bd 2 thalia - May 11 2023
web im zuge der weiteren ermittlungen entdecken lenz und seine männer dass das büro des justiziars abgehört wurde außerdem finden sie heraus dass er in engem geschäftlichen
kammerflimmern lenz zweiter fall amazon de bücher - Mar 09 2023
web kammerflimmern lenz zweiter fall isbn 9783839230534 kostenloser versand für alle bücher mit versand und verkauf duch amazon
kammerflimmern lenz zweiter fall ausgabe 9 google play - Jun 12 2023
web kammerflimmern lenz zweiter fall ausgabe 9 ebook written by matthias p gibert read this book using google play books app on your pc android ios devices
kammerflimmern lenz zweiter fall pdf free download - Feb 25 2022
web lenz blieb vor einem gerät stehen das etwa zwei meter neben ihrem tresen aufgebaut war und auf dem offensichtlich die neuesten informationen für besucher und mitarbeiter

kammerflimmern lenz zweiter fall by matthias p gibert - Jul 01 2022
web im zuge der weiteren ermittlungen entdecken lenz und seine männer dass das büro des justiziars abgehört wurde außerdem finden sie heraus dass er in engem geschäftlichen
kammerflimmern lenz zweiter fall lenz krimi 2 kindle edition - Dec 06 2022
web jul 2 2008 kammerflimmern lenz zweiter fall lenz krimi 2 ebook gibert matthias p amazon de kindle store
kammerflimmern lenz zweiter fall lovelybooks - Oct 04 2022
web jul 25 2009 dezember 2007 wolfgang goldberg justiziar der industrie und handelskammer kassel wird erhängt in einem wald bei kassel gefunden in derselben
kammerflimmern doccheck flexikon - Apr 29 2022
web apr 7 2022 kammerflimmern kurz vf ist eine akut lebensbedrohliche tachyarrhythmie des herzens bei der die kammerfrequenz stark erhöht 320 min ist und die
kammerflimmern lenz zweiter fall 50storiesfortomorrow ilfu com - Oct 24 2021
web kammerflimmern lenz zweiter fall reviewing kammerflimmern lenz zweiter fall unlocking the spellbinding force of linguistics in a fast paced world fueled by
paul lenz series by matthias p gibert goodreads - Sep 03 2022
web nervenflattern paul lenz 1 kammerflimmern lenz zweiter fall zirkusluft lenz dritter fall eiszeit paul lenz 4 bullenhitze lenz fünfter
download pdf kammerflimmern lenz zweiter fall pdf - Dec 26 2021
web contact 1243 schamberger freeway apt 502port orvilleville on h8j 6m9 719 696 2375 x665 email protected
kammerflimmern lenz zweiter fall pdf free download - Jan 27 2022
web kammerflimmern lenz zweiter fall home kammerflimmern lenz zweiter fall author matthias p gibert 13 downloads 339 views 2mb size report this content was
kammerflimmern rechtschreibung bedeutung definition - Mar 29 2022
web definition rechtschreibung synonyme und grammatik von kammerflimmern auf duden online nachschlagen wörterbuch der deutschen sprache
kammerflimmern lenz zweiter fall by matthias p gibert - Jul 13 2023
web jul 1 2008 kammerflimmern book read reviews from world s largest community for readers dezember 2007 wolfgang goldberg justiziar der industrie und handelskamme
digital library libraries - Aug 23 2023
dec 25 2021 home digital library digital library digital library is established using caliber digital library software digital

contents over 37 000 ebooks are organized built and accessible for users via internet in the campus network the library is also equipped with various e journals

library addis ababa science and technology university - Jun 09 2022

sep 30 2023 tel 251 11 888 0606 mob 251 993807178 e mail pir aastu edu et registrar aastu edu et p o box 16417

library service aau aait 5 kilo - Jul 10 2022

electronic resources services periodicals services reference services the institute library shall be headed by a head librarian the institute librarian shall have an overall responsibility for the well functioning and development of the library system the aait library has structured by both academic and administrative support staff

adu library abu dhabi university - Feb 05 2022

zayed city abu dhabi adulibrary adu ac ae get in touch 971 2 5015773 the abu dhabi university adu library provides educational services to adu communities that include orientation training database searching and more

digital library aau library addis ababa university - Sep 24 2023

campus libraries library hours by location circulation information borrowing books audiovisual information interlibrary loan glossary of library terms computer access internet configure your device for campus wifi support the library

addis ababa university electronic library yvc moeys gov - Mar 06 2022

addis ababa university electronic library and numerous books collections from fictions to scientific research in any way in the midst of them is this addis ababa university electronic library that can be your partner

issn 2310 8177 online addis ababa university libraries electronic - Sep 12 2022

resource information title proper addis ababa university libraries electronic thesis and dissertations other variant title aau etd original alphabet of title basic roman subject udc 001 subject science and knowledge in general

search results for thesis aau library addis ababa university - Feb 17 2023

sep 17 2014 may 6 2021 the college natural and computational sciences library usually called the science library is the second largest library next to j f kennedy library in the addis ababa library system the library comprised of two buildings the main library which is found at read more

library st mary s university - May 08 2022

st mary s university ethiopia addis ababa smu library st mary s university library was established in 1998 to serve as center for collection processing storage and distribution of information and knowledge resources in print and electronic formats to enhance the teaching learning process research and public service and meet the goals of the university through

list of subscribed electronic resources aau library - Apr 19 2023

list of subscribed electronic resources available for the addis ababa university community no resource name access url user

name password 1 journal of the acoustical society of america jasa scitation aip org jasa not required not required 2 african journals online ajol

library eiabc edu et - Oct 13 2022

the library service is provided in close cooperation with the addis ababa university libraries aaul for detail and more information about library services collection e resources other aau branch libraries library policies etc please visit aau edu et

aau etd home addis ababa university - Mar 18 2023

aau ir is a digital service that collects preserves and distributes digital material the repository is important tool for preserving the aau s legacy it facilitates digital preservation and scholarly communication colleges in aau etd select a college to browse its collections addis ababa institute of technology

addis ababa university libraries electronic thesis and sherpa - Aug 11 2022

repository information repository name addis ababa university libraries electronic thesis and dissertations database aau etd english repository type institutional repository url etd aau edu et oai pmh url

eiabc aau library addis ababa university - Jan 16 2023

eiabc library is one of the branches of addis ababa university library system aaul it is located at the lideta campus of the eiabc and supports the teaching learning and research needs of the institute by providing up to date and relevant information resources

home abrehot library - Apr 07 2022

jan 22 2022 eng wubayehu mamo agonafir is director of abrehot library special communication advisor of addis ababa university and federal referee in ethiopian football federation news and events addis ababa ethiopia 0111704576 0111704250 about the library vision mission values

how to find researches and other resources aau library - Jul 22 2023

books can be found on your school or public library website type in keywords related to your topic in the search field and see what kinds of literature comes up write down the call number of the book so that you can find it within your library ask your librarian for help if you re not sure how your library is organized

aauelearning aau digital library addis ababa university - Dec 15 2022

home site news mit open courseware national academic digital library of ethiopia aau digital library courses

national academic digital library of ethiopia - Nov 14 2022

national academic digital library of ethiopia ethiopian education and research network ethernet king george vi av addis ababa ethiopia phone 251 111 55 31 33

home libraries - Jun 21 2023

2 days ago digital library services study spaces study areas syndicate rooms graduate students workstations female students study spaces libraries engineering library science library digital library graduate library female students libraries freshman library e resources digital library nadle aastu e books free lectures courses e

addis ababa university libraries catalog - May 20 2023

addis ababa university libraries lists public lists ayubaaa fav view all your lists log in to create your own lists log in to your account search history clear amharic virtual screen keyboard amharic screen keyboard